# ICON GAS PARTS MANUAL

REV. 4/18/2024

G40
G40L

Chassis frame(1)

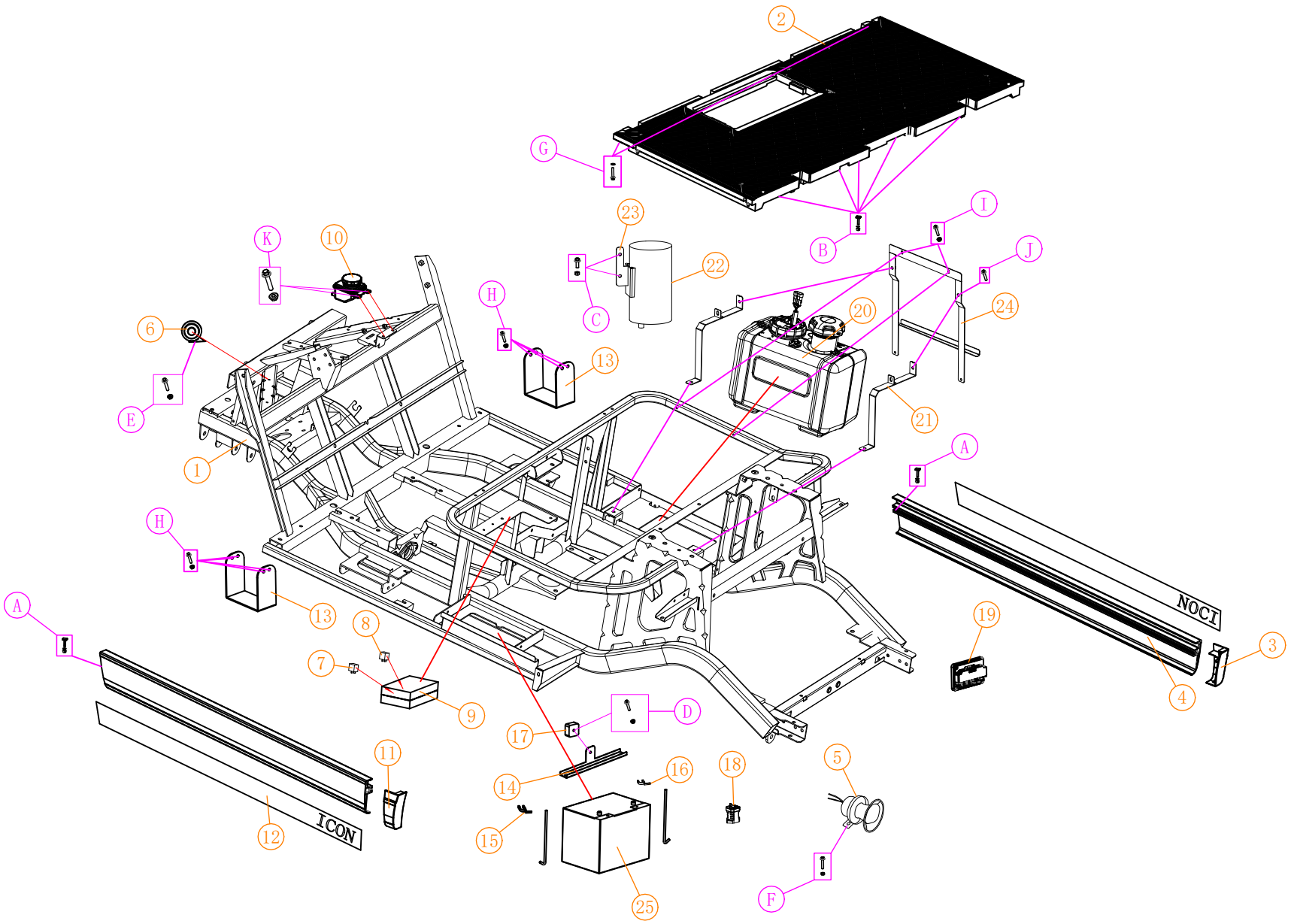

## screw specifications

| NO: | Code | Name | QTY | Remark |
|---|---|---|---|---|
| A | 3.01.003.070134<br>3.205.03.010032<br>HW-ECHD304 | (M6*50)<br>All sides screw | 4 | |
| | 3.01.003.100013<br>3.205.04.030002<br>HW-223-IC | (6mm)<br>Flange self-locking nut | 4 | |
| | 3.01.003.080011<br>3.205.01.020009<br>HW-222-IC | 1.5*6.5*26) Flat gasket | 4 | |
| B | 3.01.003.070120<br>3.205.03.010007<br>HW-ECHD302 | (M6*16)<br>All sides screw | 5 | |
| | 3.01.003.100013<br>3.205.04.030002<br>HW-223-IC | (6mm)<br>Flange self-locking nut | 5 | |
| | 3.01.003.080011<br>3.205.01.020009<br>HW-222-IC | (1.5*6.5*26) Flat gasket | 5 | |
| C | 3.01.003.060004<br>3.205.04.010003<br>HW-219-IC | (6*16)<br>Flange screw | 2 | |
| | 3.01.003.100013<br>3.205.04.030002<br>HW-223-IC | 6mm)<br>Flange self-locking nut | 2 | |
| D | 3.01.003.060004<br>3.205.04.010003<br>HW-219-IC | (6*16)<br>Flange screw | 1 | |
| | 3.01.003.100013<br>3.205.04.030002<br>HW-223-IC | (6mm)<br>Flange outer hexagon common nut | 1 | |
| E | 3.01.003.060022<br>3.205.04.010019<br>HW-204-IC | (6*45)<br>Flange screw | 1 | |
| | 3.01.003.100013<br>3.205.04.030002<br>HW-223-IC | (6mm)<br>Flange self-locking nut | 1 | |
| F | 3.01.003.060004<br>3.205.04.010003<br>HW-219-IC | (6*16)<br>Flange screw | 1 | |
| | 3.01.003.100009<br>3.205.04.030008<br>HW-220-IC | (6mm)<br>Flange external hexagonal nut | 1 | |
| G | 3.01.003.060004<br>3.205.04.010003<br>HW-219-IC | (6*16)<br>Flange screw | 2 | |
| | 3.01.003.080011<br>3.205.01.020009<br>HW-222-IC | (1.5*6.5*26)<br>Flat gasket | 2 | |
| H | 3.01.003.060006<br>3.205.04.010005<br>HW-208-IC | (8*20)<br>Flange screw | 8 | |
| | 3.01.003.100014<br>3.205.04.030003<br>HW-205-IC | (8mm)<br>Flange self-locking nut | 8 | |
| I | 3.01.003.060019<br>3.205.04.010016<br>HW-345-IC | (M6*40)<br>Flange screw | 2 | |
| | 3.01.003.100013<br>3.205.04.030002<br>HW-223-IC | (M6)<br>Flange self-locking nut | 2 | |
| J | 3.01.003.060004<br>3.205.04.010003<br>HW-219-IC | (M6*16)<br>Flange screw | 4 | |
| K | 3.01.003.060005<br>3.205.04.010004<br>HW-209-IC | (6*20)<br>Flange screw | 1 | |
| | 3.01.003.100013<br>3.205.04.030002<br>HW-223-IC | (6mm)<br>Flange self-locking nut | 1 | |
| | | | | |
| | | | | |

G40
G40L

| | | | | |
|---|---|---|---|---|
| 25 | 3.03.006.000132<br>3.202.06.000049<br>BTRY-501-ICG | 12V start battery | 1 | |

## Chassis frame(1)

| NO: | Code | Name | QTY | Remark |
|---|---|---|---|---|
| 1 | 2.03.107.100020<br>CHSS-501-ICG | G617.2-B chassis frame | 1 | G40 |
| | 2.03.107.100021<br>CHSS-502-ICG | G617.2G-B chassis frame | 1 | G40L |
| 2 | 3.02.011.900080<br>3.201.16.010183<br>BD-554-ECO | B617.2 front baseplate | 1 | |
| 3 | 3.02.011.900099<br>3.201.16.010191<br>BD-559-ECO | B617 Rear side cover sheet plug L | 1 | injection model |
| 4 | 2.01.001.070250<br>2.01.105.000001<br>BD-579-ECO | B617.2 Side guard | 2 | |
| 5 | 3.03.010.000008<br>3.202.10.000008<br>ELE-708-IC | S14<br>Reversing voice buzzer | 1 | |
| 6 | 3.03.010.000007<br>3.202.10.000007<br>ELE-701-IC | 12V<br>Fanfare horn | 1 | |
| 7 | 3.03.012.000011<br>3.202.12.000004<br>ELE-705-IC | Relay (4pins) | 2 | 12V 80A(DJ1912)<br>Four pin relay |
| 8 | 3.03.012.000010<br>3.202.12.000003<br>ELE-706-IC | Relay (5pins) | 1 | 12V 80A(D1914)<br>Five pin relay |
| 9 | | Fuse Box | 1 | |
| 10 | 3.01.004.050184<br>3.206.14.000134<br>BRAK-912-HD | Brake oil tank-B | 1 | |
| 11 | 3.02.011.900098<br>3.201.16.010190<br>BD-556-ECO | B617 Rear side cover sheet plug L | 1 | |
| 12 | 2.03.107.100020<br>4.01.004.010037<br>DECAL-700-ECO | B617.2 ICON Side guard sticker | 1 | |
| 13 | 2.03.105.000035<br>HW-ECHD303 | B617 Side step reinforcement folding plate | 2 | |
| 14 | 2.01.004.220018<br>2.03.107.100004<br>BD-305-ICG | G617 Battery platen | 1 | |
| 15 | 3.209.02.000242<br>BTRY-502-ICG | Activate the battery clamp | 1 | |
| 16 | 3.01.006.000918<br>3.209.02.000187<br>BD-306-ICG | Activate the battery clamp | 1 | |
| 17 | 3.03.016.000026<br>3.202.16.030161<br>BD-316-ICG | Dynamo governor | 1 | |
| 18 | 3.03.015.000016<br>3.202.14.000031<br>BD-317-ICG | 12V start the DC contactor | 1 | |
| 19 | 3.03.017.000179<br>3.202.03.000047<br>BD-318-ICG | Electronic parking controller | 1 | |
| 20 | | Fuel tank | 1 | |
| 21 | 2.03.107.100024<br>BD-302-ICG | Tank strap | 2 | |
| 22 | 3.209.02.000246<br>BD-304-ICG | Carbon tank | 1 | |
| 23 | 3.209.02.000245<br>BD-319-ICG | Carbon tank support | 1 | |
| 24 | 2.03.107.100029<br>BD-303-ICG | G617-B Oil tubing anchor assembly | 1 | |

G60
G60L

Chassis frame(2)

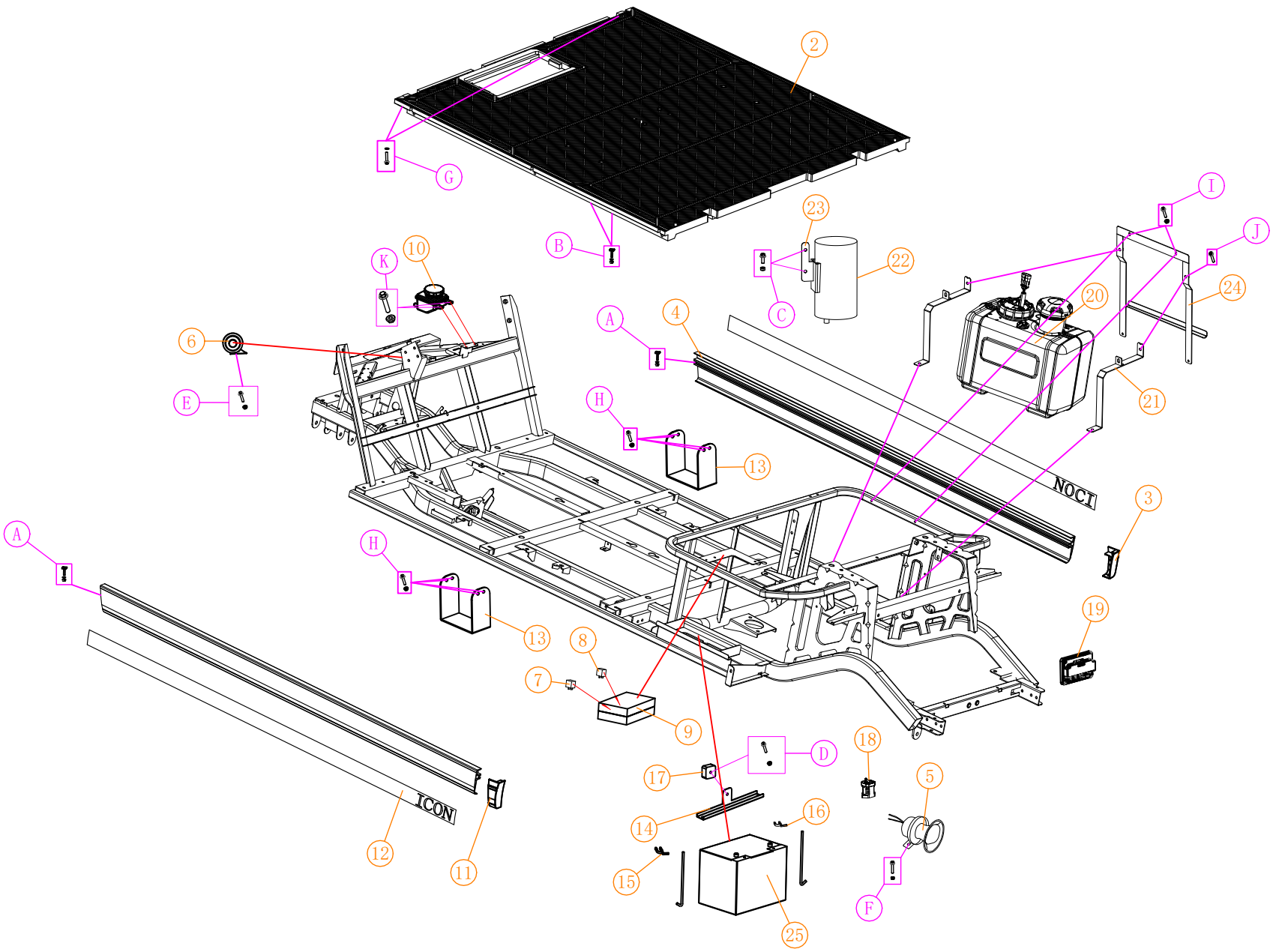

## screw specifications

| NO: | Code | Name | QTY | Remark |
|---|---|---|---|---|
| A | 3.01.003.070134<br>3.205.03.010032<br>HW-ECHD304 | (M6*50)<br>All sides screw | 4 | |
| | 3.01.003.100013<br>3.205.04.030002<br>HW-223-IC | (6mm)<br>Flange self-locking nut | 4 | |
| | 3.01.003.080011<br>3.205.01.020009<br>HW-222-IC | (1.5*6.5*26)<br>Flat gasket | 4 | |
| B | 3.01.003.070120<br>3.205.03.010007<br>HW-ECHD302 | (M6*16)<br>All sides screw | 5 | |
| | 3.01.003.100013<br>3.205.04.030002<br>HW-223-IC | (6mm)<br>Flange self-locking nut | 5 | |
| | 3.01.003.080011<br>3.205.01.020009<br>HW-222-IC | (1.5*6.5*26)<br>Flat gasket | 5 | |
| C | 3.01.003.060004<br>3.205.04.010003<br>HW-219-IC | (6*16)<br>Flange screw | 2 | |
| | 3.01.003.100013<br>3.205.04.030002<br>HW-223-IC | (6mm)<br>Flange self-locking nut | 2 | |
| D | 3.01.003.060004<br>3.205.04.010003<br>HW-219-IC | (6*16)<br>Flange screw | 1 | |
| | 3.01.003.100013<br>3.205.04.030002<br>HW-223-IC | (6mm)<br>Flange outer hexagon common nut | 1 | |
| E | 3.01.003.060022<br>3.205.04.010019<br>HW-204-IC | (6*45)<br>Flange screw | 1 | |
| | 3.01.003.100013<br>3.205.04.030002<br>HW-223-IC | (6mm)<br>Flange self-locking nut | 1 | |
| F | 3.01.003.060004<br>3.205.04.010003<br>HW-219-IC | (6*16)<br>Flange screw | 1 | |
| | 3.01.003.100009<br>3.205.04.030008<br>HW-220-IC | (6mm)<br>Flange external hexagonal nut | 1 | |
| G | 3.01.003.060004<br>3.205.04.010003<br>HW-219-IC | (6*16)<br>Flange screw | 2 | |
| | 3.01.003.080011<br>3.205.01.020009<br>HW-222-IC | (1.5*6.5*26)<br>Flat gasket | 2 | |
| H | 3.01.003.060006<br>3.205.04.010005<br>HW-208-IC | (8*20)<br>Flange screw | 8 | |
| | 3.01.003.100014<br>3.205.04.030003<br>HW-205-IC | (8mm)<br>Flange self-locking nut | 8 | |
| I | 3.01.003.060019<br>3.205.04.010016<br>HW-345-IC | (M6*40)<br>Flange screw | 2 | |
| | 3.01.003.100013<br>3.205.04.030002<br>HW-223-IC | (M6)<br>Flange self-locking nut | 2 | |
| J | 3.01.003.060004<br>3.205.04.010003<br>HW-219-IC | (M6*16)<br>Flange screw | 4 | |
| K | 3.01.003.060005<br>3.205.04.010004<br>HW-209-IC | (6*20)<br>Flange screw | 1 | |
| | 3.01.003.100013<br>3.205.04.030002<br>HW-223-IC | (6mm)<br>Flange self-locking nut | 1 | |
| | | | | |
| | | | | |

G60
G60L

| | | | | |
|---|---|---|---|---|
| 25 | 3.03.006.000132<br>3.202.06.000049<br>BTRY-501-ICG | 12V start battery | 1 | |

## Chassis frame(2)

| NO: | Code | Name | QTY | Remark |
|---|---|---|---|---|
| 1 | 2.03.107.100022<br>BD-311-ICG | G617.4-B chassis frame | 1 | G60 |
| | 2.03.107.100023<br>BD-312-ICG | B617.4G-B chassis frame | 1 | G60L |
| 2 | 3.02.011.900081<br>3.201.16.010184<br>BD-555-ECO | B617.4 front baseplate | 1 | injection model |
| 3 | 3.02.011.900099<br>3.201.16.010191<br>BD-559-ECO | B617 Rear side cover sheet plug L | 1 | injection model |
| 4 | 2.01.001.070249<br>2.01.105.000002<br>BD-551-ECO | B617.4 Side guard | 2 | |
| 5 | 3.03.010.000008<br>3.202.10.000008<br>ELE-708-IC | S14 Reversing voice buzzer | 1 | |
| 6 | 3.03.010.000007<br>3.202.10.000007<br>ELE-701-IC | Fanfare horn 12V | 1 | |
| 7 | 3.03.012.000011<br>3.202.12.000004<br>ELE-705-IC | Relay (4pins) | 2 | 12V 80A(DJ1912)<br>Four pin relay |
| 8 | 3.03.012.000010<br>3.202.12.000003<br>ELE-706-IC | Relay (5pins) | 1 | 12V 80A(D1914)<br>Four pin relay |
| 9 | | Fuse Box | 1 | |
| 10 | 3.01.004.050184<br>3.206.14.000134<br>BRAK-912-HD | Brake oil tank-B | 1 | |
| 11 | 3.02.011.900098<br>3.201.16.010190<br>BD-556-ECO | B617 Rear side cover sheet plug L | 1 | |
| 12 | 4.01.004.010045<br>BD-313-ICG | B617.4 Side guard sticker/ ICON | 1 | |
| 13 | 2.03.105.000035<br>HW-ECHD303 | B617 Side step reinforcement folding plate | 2 | |
| 14 | 2.01.004.220018<br>2.03.107.100004<br>BD-305-ICG | G617 Battery platen | 1 | |
| 15 | 3.209.02.000242<br>BTRY-502-ICG | Activate the battery clamp | 1 | |
| 16 | 3.01.006.000918<br>3.209.02.000187<br>BD-306-ICG | Activate the battery clamp | 1 | |
| 17 | 3.03.016.000026<br>3.202.16.030161<br>BD-316-ICG | Dynamo governor | 1 | |
| 18 | 3.03.015.000016<br>3.202.14.000031<br>BD-317-ICG | 12V start the DC contactor | 1 | |
| 19 | 3.03.017.000179<br>3.202.03.000047<br>BD-318-ICG | Electronic parking controller | 1 | |
| 20 | | Fuel tank | 1 | |
| 21 | 2.03.107.100024<br>BD-302-ICG | Tank strap | 2 | |
| 22 | 3.209.02.000246<br>BD-304-ICG | Carbon tank | 1 | |
| 23 | 3.209.02.000245<br>BD-319-ICG | Carbon tank support | 1 | |
| 24 | 2.03.107.100029<br>BD-303-ICG | G617-B Oil tubing anchor assembly | 1 | |

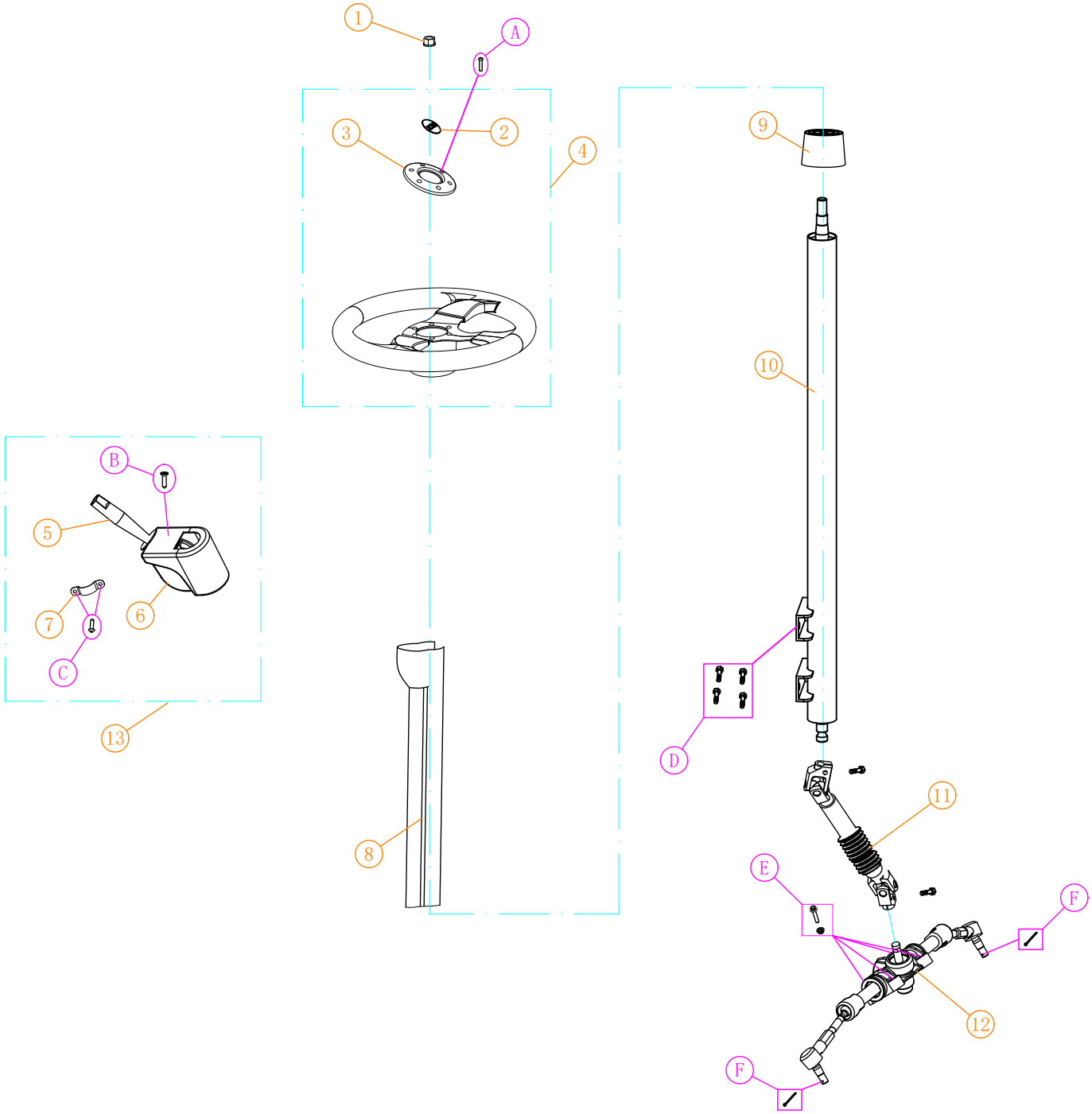


## Steering system(1)

| NO: | Code | Name | QTY | Remark |
|---|---|---|---|---|
| 1 | 3.01.003.100016<br>3.205.04.030005<br>HW-231-IC | Flange Nut | 1 | M12 |
| 2 | 4.04.002.000350<br>4.01.005.030024<br>ACS-715-IC | Steering wheel logo | 1 | |
| 3 | 3.02.014.000305<br>3.206.10.000020<br>SR-318-IC | Trim ringtrim ring | 1 | |
| 4 | 3.01.004.070289<br>3.206.10.000005<br>SR-319-IC | Steering wheel | 1 | |
| 5 | 3.03.011.000025<br>3.202.02.020062<br>LIGHT-701-IC | Single arm combination switch | 1 | |
| 6 | 3.03.011.000027<br>3.201.16.010062<br>BD-718-IC | Single arm combination switch holder | 1 | |
| 7 | 3.01.003.100104<br>3.209.02.000003<br>ELE-702-IC | Half side code | 2 | |
| 8 | 3.02.011.300051<br>3.201.16.010019<br>SR-ECHD807 | A627 Steering switch wire cover | 1 | |
| 9 | 3.02.014.000013<br>3.206.10.000017<br>SR-305-IC | S8. FA steering hub adapter | 1 | With racing steering wheel |
| 10 | 3.01.004.070302<br>3.206.17.000027<br>SR-ECHD804 | B617.2 Steering column | 1 | |
| | 3.01.004.070301<br>3.206.17.000026<br>SR-400-CS | B617.4 Steering column | 1 | |
| 11 | 3.01.004.900041<br>3.206.02.000022<br>SR-327-IC | A627 universal joint fork assembly | 1 | Non-lifted version |
| | 3.01.004.900051<br>3.206.02.000023<br>SR-328-IC | A627 Lifted vehicle universal joint fork assembly-B | 1 | Lifted version |
| 12 | 3.206.01.000064<br>SR-201-ICGPR | C727<br>Steering | 1 | Non-lifted version |
| | 3.01.004.070125<br>3.206.01.000021<br>SR-301-IC | A627 Lifted car steering machine-B | 1 | Lifted version |
| 13 | 2.08.001.000085<br>SR-330-IC | Single arm combination switch assy | 1 | |
| | | | | |
| | | | | |
| A | 3.01.003.100126<br>3.205.01.010135<br>HW-232-IC | Hexagon socket flat round head screw | 6 | 5*16 |
| B | 3.01.003.040024<br>3.205.01.010161<br>HW-233-IC | Stinless steel flat head Phillips screw | 4 | 4*16 |
| C | 3.01.003.030039<br>3.205.01.010038<br>HW-234-IC | Stinless steel round head Phillips screw | 4 | 5*25 |
| D | 3.01.003.060006<br>3.205.04.010005<br>HW-208-IC | Flange Screw | 4 | 8*20 |
| E | 3.01.003.060017<br>3.205.04.010015<br>HW-265-IC | (10*35)<br>Flange screw | 4 | |
| | 3.01.003.100015<br>3.205.04.030004<br>HW-239-IC | (10mm)<br>Flange nut | 4 | |
| F | 3.01.003.090006<br>3.205.05.040003<br>BRAK-ECHD102 | Cotter pin | 2 | 2.5*30 |

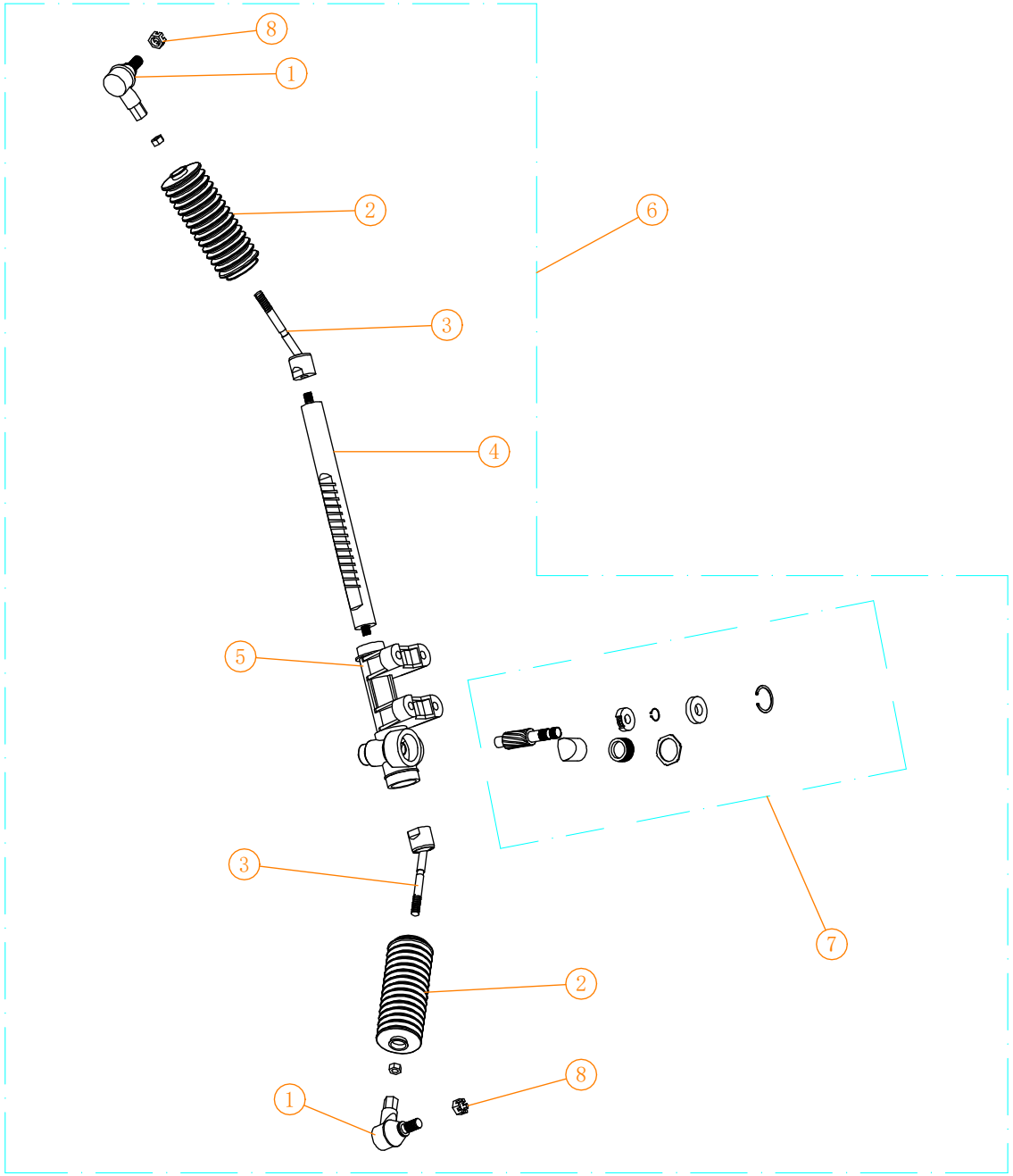


## Steering system(2)

| NO: | Code | Name | QTY | Remark |
|---|---|---|---|---|
| 1 | 3.01.004.070187<br>3.206.11.000009<br>SR-ECHD802 | A direction machine small ball head | 2 | Non-lifted version |
| | 3.01.004.070150<br>3.206.11.000010<br>SR-321-IC | A627 heightening car steering machine small ball head | 2 | Lifted version |
| 2 | 3.02.014.000032<br>3.201.11.000062<br>SR-322-IC | Dust proof rubber boot | 2 | |
| 3 | 3.01.004.070186<br>3.206.12.000016<br>SR-ECHD803 | A-type car steering gear large ball head | 2 | Non-lifted version |
| | 3.01.004.070185<br>3.206.12.000009<br>SR-ECHD806 | A627 heightening car steering machine large ball head | 2 | Lifted version |
| 4 | 3.01.004.070183<br>3.206.01.000028<br>SR-325-IC | A627 Steering gear rack | 1 | Non-lifted version |
| | 3.01.004.070184<br>3.206.01.000029<br>SR-ECHD800 | Type A car steering gear rack | 1 | Lifted version |
| 5 | 3.01.004.070013<br>3.206.01.000007<br>SR-326-IC | Steering box housing | 1 | |
| 6 | 3.206.01.000064<br>SR-201-ICGPR | C727 Steering | 1 | Non-lifted version |
| | 3.01.004.070125<br>3.206.01.000021<br>SR-301-IC | A627 Lifted car steering machine-B | 1 | Lifted version |
| 7 | 3.01.004.070012<br>3.206.01.000006<br>SR-329-IC | Steering machine repair kit | 1 | |
| 8 | 3.01.003.100040<br>3.205.03.030004<br>HW-237-IC | Steering machine ball nut | 2 | M12 |

Non-lifted cart

Viewing from Left front wheel

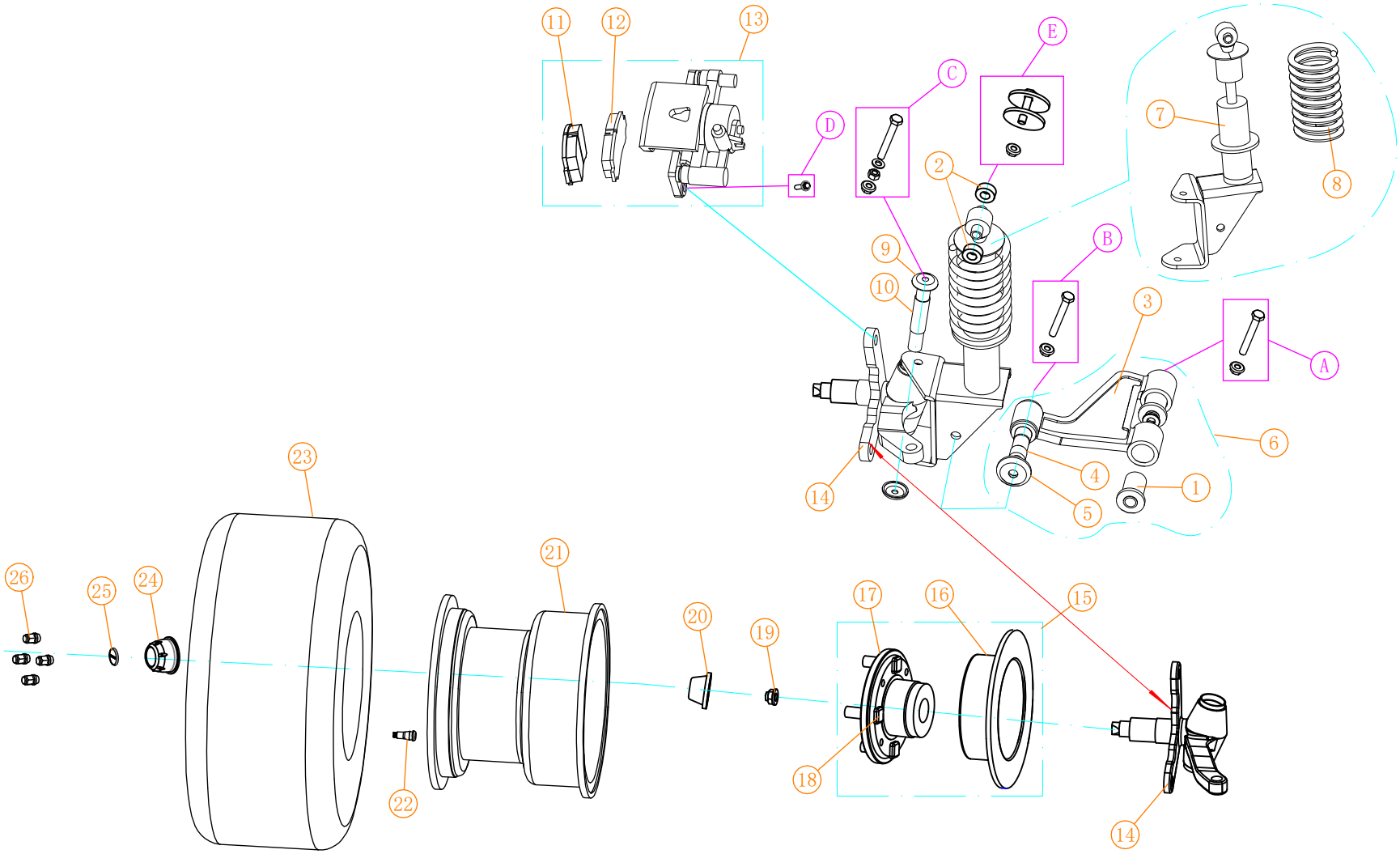

## screw specifications

| NO: | Code | Name | QTY | Remark |
|---|---|---|---|---|
| A | 3.01.006.020045<br>3.205.03.010026<br>HW-224-IC | GM12-75<br>Screw | 4 | M12*75 |
| | 3.01.003.100016<br>3.205.04.030005<br>HW-231-IC | Flange self-locking nut | 4 | M12 |
| B | 3.01.006.020044<br>3.205.03.010025<br>HW-246-IC | GM12-85<br>Screw | 2 | M12*85 |
| | 3.01.003.100016<br>3.205.04.030005<br>HW-231-IC | Flange self-locking nut | 2 | M12 |
| C | 3.01.006.020046<br>3.205.03.010027<br>HW-247-IC | GM10*140<br>Kingpin screw | 2 | M10*140 |
| | 3.01.003.080005<br>3.205.01.020005<br>HW-379-IC | （2.0*10*20）<br>Flat gasket | 2 | |
| | 3.01.003.100011<br>3.205.04.030010<br>HW-380-IC | Flange outer hexagon common nut | 2 | M10 |
| | 3.01.003.100015<br>3.205.04.030004<br>HW-239-IC | Flange self-locking nut | 2 | M10 |
| D | 3.01.003.060008<br>3.205.04.010007<br>HW-248-IC | Flange Screw | 4 | M12*20 |
| E | 3.01.003.100084<br>3.205.04.010074<br>HW-249-IC | Adjusting screw | 2 | M10*70 |
| | 3.01.003.100015<br>3.205.04.030004<br>HW-239-IC | Flange self-locking nut | 2 | M10 |

| | | | | |
|---|---|---|---|---|
| 23 | 3.02.001.000063<br>3.201.01.000023<br>WT-108-IC | Tire | 2 | 205/50-10, pattern P820, 6P, with DOT certification |
| 24 | 3.01.004.020057<br>3.206.06.000033<br>WT-103-IC | Wheel rim cover | 2 | |
| 25 | 4.04.002.000203<br>4.01.005.060046<br>ACS-717-IC | Wheel rim logo | 2 | |
| 26 | 3.01.003.100045<br>3.205.05.030015<br>WT-109-IC | C brake drum nut | 8 | four for each side |

## Front suspension(1)

| NO: | Code | Name | QTY | Remark |
|---|---|---|---|---|
| 1 | 3.01.004.070021<br>3.206.18.000013<br>SUS-715-IC | suspension bushing | 4 | two for each side |
| 2 | 3.02.014.000012<br>3.201.11.000061<br>SUS-716-IC | S4P Limiting rubber sleeve | 4 | |
| 3 | 2.01.004.010221<br>2.03.101.100112<br>SUS-701-ICG | rocker arm | 2 | one for each side |
| 4 | 3.01.004.070023<br>3.206.16.000003<br>SUS-718-IC | Arm shaft | 2 | one for each side |
| 5 | 3.01.004.070024<br>3.206.16.000001<br>SUS-719-IC | Arm seal | 4 | two for each side |
| 6 | 2.03.001.000006<br>2.08.001.000028<br>SUS-710-IC | A-type car rocker arm assembly | 2 | |
| 7 | 3.01.004.080002<br>3.206.03.000001<br>SUS-720-IC | front shock absorber/L (Driver) | 1 | |
| | 3.01.004.080001<br>3.206.03.000002<br>SUS-721-IC | front shock absorber/R(Passenger) | 1 | |
| 8 | 3.01.004.080015<br>3.206.13.000023<br>SUS-702-ICG | A4-Front spring | 2 | |
| 9 | 3.02.014.000110<br>3.206.18.000027<br>SUS-724-IC | Knuckle shaft seal/big | 4 | two for each side |
| 10 | 3.01.004.070022<br>3.206.09.000003<br>HW-241-IC | Main washer | 2 | one for each side |
| 11 | 3.01.004.900087<br>3.206.14.000022<br>BRAK-661-IC | Front brake caliper brake pad/ inner | 2 | one for each side |
| 12 | 3.01.004.900088<br>3.206.14.000021<br>BRAK-662-IC | Front brake caliper brake pad/ outer | 2 | one for each side |
| 13 | 3.01.006.200092<br>3.206.14.000125<br>BRAK-613-IC | Front brake cylinder/L (Driver) | 1 | |
| | 3.01.006.200091<br>3.206.14.000124<br>BRAK-612-IC | Front brake cylinder/R (Passenger) | 1 | |
| 14 | 3.01.004.050120<br>3.206.09.000010<br>SUS-711-IC | Disc brake knuckle/R (Passenger) | 1 | |
| | 3.01.004.050121<br>3.206.09.000011<br>SUS-713-IC | Disc brake knuckle/L (Driver) | 1 | |
| 15 | 3.01.004.050116<br>3.206.05.000032<br>BR-701-IC | A Dise Wheel Bearing assy | 2 | |
| 16 | 3.01.004.050172<br>3.206.14.000138<br>BRAK-617-IC | A brake disc | 2 | |
| 17 | 3.01.004.050173<br>3.206.14.000139<br>BR-702-IC | A Disc brake bearing base | 2 | |
| 18 | 3.01.003.070026<br>3.205.05.010024<br>HW-245-IC | Disc wheel screw | 8 | |
| 19 | 3.01.003.070019<br>3.205.03.030002<br>HW-243-IC | knuckle nut | 2 | |
| 20 | 3.01.004.050122<br>3.206.18.000034<br>SUS-726-IC | Metal Wheel cover | 2 | |
| 21 | 3.01.004.020007<br>3.206.06.000015<br>WT-105-IC | LD-A0521070<br>Wheel rim | 2 | 10 inch steel ring |
| 22 | 3.02.001.000021<br>3.201.01.000007<br>WT-106-IC | Valve | 2 | one for each side |

## screw specifications

| NO: | Code | Name | QTY | Remark |
|---|---|---|---|---|
| A | 3.01.003.060069<br>3.205.04.010058<br>HW-250-IC | (10*75)<br>Flange screw | 4 | |
| | 3.01.003.100015<br>3.205.04.030004<br>HW-239-IC | (10mm)<br>Flange self-locking nut | 4 | |
| B | 3.01.003.060065<br>3.205.04.010054<br>HW-251-IC | (12*50)<br>Flange screw | 4 | |
| | 3.01.003.100016<br>3.205.04.030005<br>HW-231-IC | (12mm)<br>Flange self-locking nut | 4 | |
| C | 3.01.003.060045<br>3.205.04.010041<br>HW-238-IC | (10*35)<br>Flange screw | 2 | |

lifted
Four wheel disc
brake

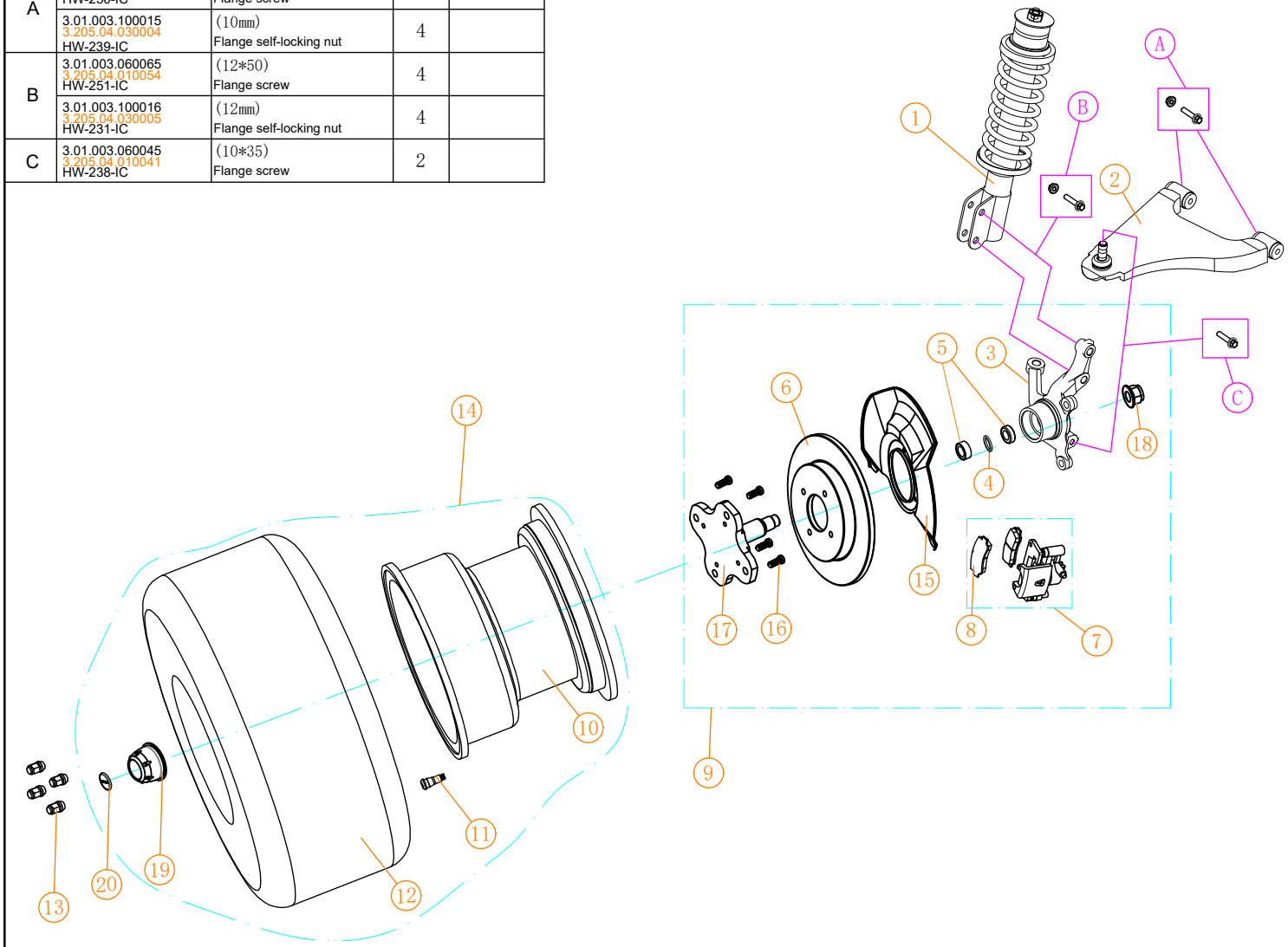


| | | | | |
|---|---|---|---|---|
| 20 | 4.04.002.000203<br>4.01.005.060046<br>ACS-717-IC | Wheel rim logo | 2 | |

## Front suspension(2)

| NO: | Code | Name | QTY | Remark |
|---|---|---|---|---|
| 1 | 3.206.03.000045<br>SUS-703-ICG | G617.2G Front shock absorber ass L (Driver) | 1 | |
| | 3.206.03.000046<br>SUS-704-ICG | G617.2G Front shock absorber ass R(Passenger) | 1 | |
| 2 | 3.01.004.070073<br>3.206.16.000011<br>SUS-701-IC | PD<br>Lower control arm/L(Driver) | 1 | |
| | 3.01.004.070074<br>3.206.16.000010<br>SUS-700-IC | PD Lower control arm/R(Passsenger) | 1 | |
| 3 | 3.01.004.070055<br>3.206.09.000018<br>SUS-733-IC | S2.DB<br>Knuckle/L(Driver) | 1 | |
| | 3.01.004.070054<br>3.206.09.000019<br>SUS-734-IC | S2.DB<br>Knuckle/R(Passenger) | 1 | |
| 4 | 3.01.004.090008<br>3.206.05.000035<br>BR-706-IC | Bearing base seal | 2 | one for each side |
| 5 | 3.01.004.090003<br>3.206.05.000005<br>BR-707-IC | Bearing 6205 | 4 | two for each side |
| 6 | 3.01.006.200081<br>3.206.14.000113<br>BRAK-619-IC | Front brake disc | 2 | one for each side |
| 7 | 3.01.006.200083<br>3.206.14.000115<br>BRAK-615-IC | Front brake callipers/R (Passenger) | 1 | |
| | 3.01.006.200082<br>3.206.14.000114<br>BRAK-614-IC | Front brake callipers/L(Driver) | 1 | |
| 8 | 3.01.004.050022<br>3.206.14.000047<br>BRAK-620-IC | V2 Front brake shoe | 4 | two for each side |
| 9 | 3.01.005.010013<br>3.206.09.000026<br>BRAK-603-IC | A627 Knuckle assy for lifted cart/R(Passenger) | 1 | |
| | 3.01.005.010012<br>3.206.09.000025<br>BRAK-604-IC | A627 Knuckle assy for lifted cart/L(Driver) | 1 | |
| 10 | 3.01.004.020045<br>3.206.06.000010<br>WT-110-IC | LD-A691275<br>Wheel rim | 2 | one for each side<br>Includes size 19 wheel rim caps |
| 11 | 3.02.001.000021<br>3.201.01.000007<br>WT-106-IC | Valve | 2 | one for each side |
| 12 | 3.02.001.000062<br>3.201.01.000022<br>WT-111-IC | brake wheel | 2 | 23*10.5-12, pattern P334, with DOT certification |
| 13 | 3.01.003.100045<br>3.205.05.030015<br>WT-109-IC | C type hub nut (with cap) | 8 | four for each side |
| 14 | 2.03.001.000065<br>2.08.001.000004<br>WT-112-IC | 23 inch brake wheel assy | 1 | 23 inches |
| 15 | 3.01.006.200117<br>3.206.14.000159<br>SUS-735-IC | Splash shield/L (Driver) | 1 | |
| | 3.01.006.200118<br>3.206.14.000160<br>SUS-736-IC | Splash shield/R (Passenger) | 1 | |
| 16 | 3.01.003.070027<br>3.205.05.010025<br>HW-378-IC | Raised car disc brake hub screws | 8 | |
| 17 | 3.01.005.010183<br>3.206.05.000050<br>BR-708-IC | Bearing base | 2 | |
| 18 | 3.01.003.070019<br>3.205.03.030002<br>HW-243-IC | Knuckle hub nut | 2 | |
| 19 | 3.01.004.020057<br>3.206.06.000033<br>WT-103-IC | Wheel rim cover | 2 | |

G40/G60

Non-lifted cart

Rear suspension system(1)

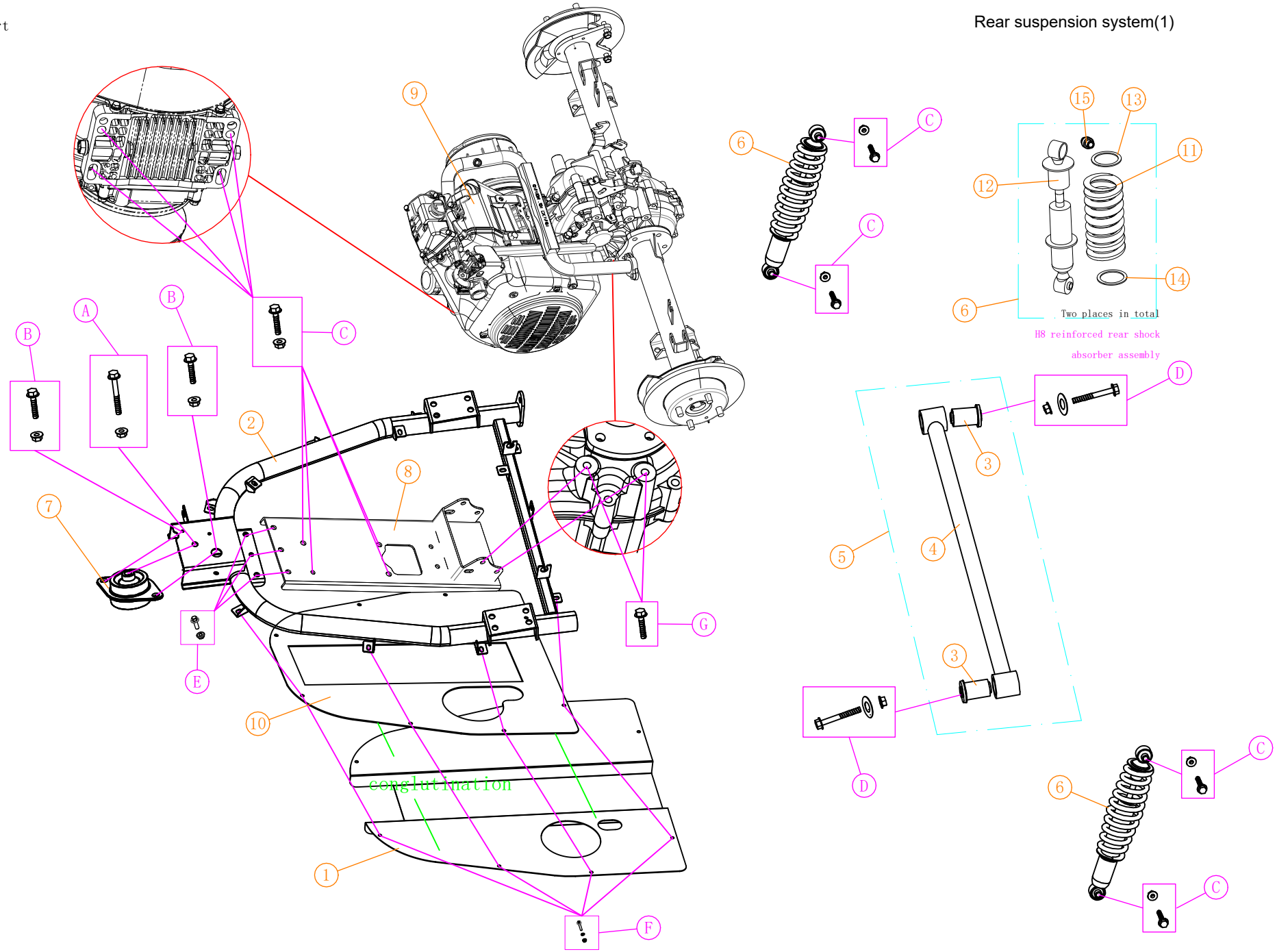

G40/G60

Non-lifted cart

## screw specifications

| NO: | Code | Name | QTY | Remark |
|---|---|---|---|---|
| A | 3.01.003.060038<br>3.205.04.010035<br>HW-253-IC | (12*80)<br>Flange screw | 1 | |
| | 3.01.003.100016<br>3.205.04.030005<br>HW-231-IC | (12mm)<br>Flange self-locking nut | 1 | |
| B | 3.01.003.060007<br>3.205.04.010006<br>HW-254-IC | (10*20)<br>Flange screw | 2 | |
| | 3.01.003.100015<br>3.205.04.030004<br>HW-239-IC | (10mm)<br>Flange self-locking nut | 2 | |
| C | 3.01.003.060017<br>3.205.04.010015<br>HW-265-IC | (M10*35)<br>Flange screw | 8 | |
| | 3.01.003.100015<br>3.205.04.030004<br>HW-239-IC | (M10)<br>Flange self-locking nut | 8 | |
| D | 3.01.003.080036<br>3.205.03.020002<br>SUS-747-IC | (3.0*12*40)<br>Gasket | 2 | |
| | 3.01.003.060037<br>3.205.04.010034<br>HW-252-IC | (12*70)<br>Flange Screw | 2 | |
| | 3.01.003.100016<br>3.205.04.030005<br>HW-231-IC | (M12)<br>Flange self-locking nut | 2 | |
| E | 3.01.003.060007<br>3.205.04.010006<br>HW-254-IC | (10*20)<br>Flange Screw | 3 | |
| | 3.01.003.100015<br>3.205.04.030004<br>HW-239-IC | (M10)<br>Flange self-locking nut | 3 | |
| F | 3.01.003.060004<br>3.205.04.010003<br>HW-219-IC | (6*16)<br>Flange screw | 8 | |
| | 3.01.003.100013<br>3.205.04.030002<br>HW-223-IC | (M6)<br>Flange self-locking nut | 8 | |
| | 3.01.003.080010<br>3.205.01.020022<br>HW-901-ICG | (1.5*6*18)<br>Flat gasket | 8 | |
| G | 3.01.003.060055<br>3.205.04.010047<br>BRAK-901-HD | (8*30)<br>Flange screw | 4 | |

## Rear suspension system(1)

| NO: | Code | Name | QTY | Remark |
|---|---|---|---|---|
| 1 | 2.02.107.000020<br>SUS-705-ICG | G617 .2 rear axel protection plate | 1 | G40<br>G60 |
| 2 | 2.01.004.220014<br>2.03.107.100001<br>SUS-706-ICG | G617 transaxle bend pipe | 1 | G40<br>G60 |
| 3 | 3.01.004.070021<br>3.206.18.000013<br>SUS-715-IC | Suspension bush | 2 | ∅13*50mm |
| 4 | 2.03.001.000038<br>2.08.001.000052<br>SUS-743-IC | A627 rear balancing pole assy | 1 | |
| 5 | 2.01.004.210012<br>2.03.103.100066<br>SUS-746-IC | A627 rear balancing pole | 1 | |
| 6 | 2.08.001.000053<br>SUS-ECHD300 | H8 rear shock absorber assy | 2 | G40 |
| | 3.206.03.000064<br>SUS-709-ICG | G617.4 rear shock absorber assy | 2 | G60 |
| 7 | 3.02.014.000069<br>3.201.16.010086<br>SUS-744-IC | Shock absorb rubber | 1 | |
| 8 | 2.01.004.220015<br>2.03.102.100011<br>BD-301-ICG | G617 engine mounting plate | 1 | |
| 9 | | Engine | 1 | |
| 10 | 3.201.11.000162<br>SUS-707-ICG | G617 engine mounting plate | 1 | |
| 11 | 3.01.004.080025<br>3.206.13.000017<br>SUS-708-ICG | H8 Rear spring | 2 | G40 |
| 12 | 3.01.004.080005<br>3.206.03.000003<br>SUS-739-IC | Rear shock absorber | 2 | |
| 13 | 3.02.014.000053<br>3.201.16.010093<br>SUS-740-IC | Rear shock absorb rubber | 2 | Inner diameter 44mm<br>Outer diameter 55mm |
| 14 | 3.02.014.000054<br>3.201.16.010094<br>SUS-741-IC | Rear shock absorb low rubber rim | 2 | Inner diameter 40mm<br>Outer diameter 55mm |
| 15 | 3.01.004.080007<br>3.206.03.000038<br>SUS-742-IC | Rear shock absorb bush | 2 | |
| | | | | |
| | | | | |
| | | | | |
| | | | | |
| | | | | |
| | | | | |
| | | | | |
| | | | | |
| | | | | |

G40L/G60L

Lifted cart

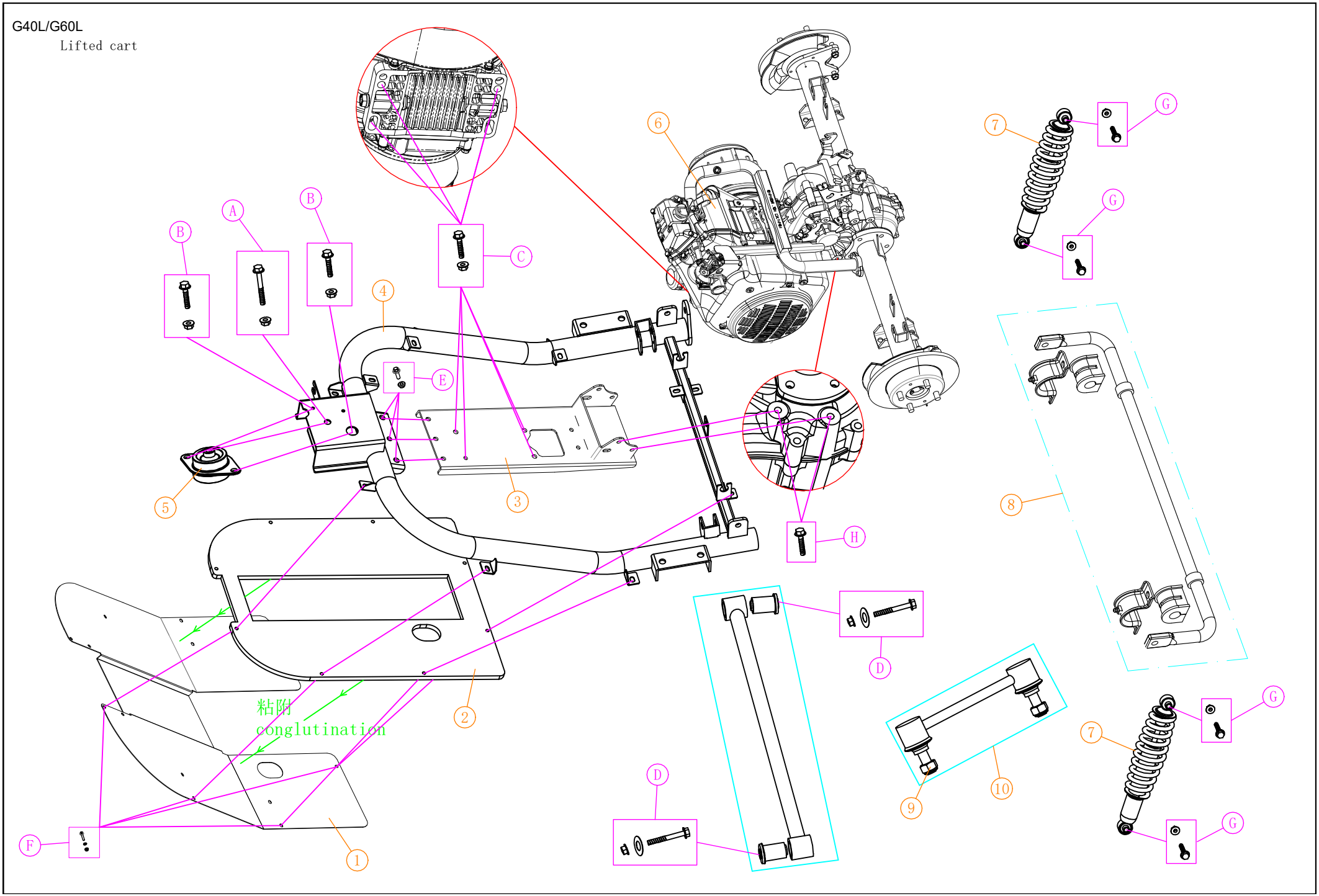

## screw specifications

| NO: | Code | Name | QTY | Remark |
|---|---|---|---|---|
| A | 3.01.003.060038<br>3.205.04.010035<br>HW-253-IC | (12*80)<br>Flange screw | 1 | |
| | 3.01.003.100016<br>3.205.04.030005<br>HW-231-IC | (12mm)<br>Flange self-locking nut | 1 | |
| B | 3.01.003.060007<br>3.205.04.010006<br>HW-254-IC | (10*20)<br>Flange screw | 2 | |
| | 3.01.003.100015<br>3.205.04.030004<br>HW-239-IC | (10mm)<br>Flange self-locking nut | 2 | |
| C | 3.01.003.060017<br>3.205.04.010015<br>HW-265-IC | (M10*35)<br>Flange screw | 4 | |
| | 3.01.003.100015<br>3.205.04.030004<br>HW-239-IC | (M10)<br>Flange self-locking nut | 4 | |
| D | 3.01.003.080036<br>3.205.03.020002<br>SUS-747-IC | (3.0*12*40)<br>Gasket | 2 | |
| | 3.01.003.060037<br>3.205.04.010034<br>HW-252-IC | (12*70)<br>Flange Screw | 2 | |
| | 3.01.003.100016<br>3.205.04.030005<br>HW-231-IC | (M12)<br>Flange self-locking nut | 2 | |
| E | 3.01.003.060007<br>3.205.04.010006<br>HW-254-IC | (10*20)<br>Flange Screw | 3 | |
| | 3.01.003.100015<br>3.205.04.030004<br>HW-239-IC | (M10)<br>Flange self-locking nut | 3 | |
| F | 3.01.003.060004<br>3.205.04.010003<br>HW-219-IC | (6*16)<br>Flange screw | 8 | |
| | 3.01.003.100013<br>3.205.04.030002<br>HW-223-IC | (M6)<br>Flange self-locking nut | 8 | |
| | 3.01.003.080010<br>3.205.01.020022<br>HW-901-ICG | (1.5*6*18)<br>Flat gasket | 8 | |
| G | 3.01.003.060060<br>3.205.04.010050<br>HW-255-IC | (10*50)<br>Flange screw | 4 | |
| | 3.01.003.100015<br>3.205.04.030004<br>HW-239-IC | (M10)<br>Flange self-locking nut | 4 | |
| H | 3.01.003.060055<br>3.205.04.010047<br>BRAK-901-HD | (8*30)<br>Flange screw | 4 | |

## Rear suspension system(2)

| NO: | Code | Name | QTY | Remark |
|---|---|---|---|---|
| 1 | 2.03.107.100019<br>SUS-710-ICG | G617 .2G rear axel protection plate | 1 | G40L<br>G60L |
| 2 | 3.201.11.000163<br>SUS-712-ICG | G617.2G raise the rear axel bend | 1 | |
| 3 | 2.03.102.100011<br>BD-301-ICG | G617 engine mounting plate | 1 | |
| 4 | 2.03.107.100028<br>SUS-713-ICG | G617-B Lifted car rear axle elbow | 1 | G40L<br>G60L |
| 5 | 3.201.16.010086<br>3.201.16.010086<br>SUS-744-IC | Shock absorb rubber | 1 | |
| 6 | | engine | 1 | |
| 7 | 3.206.03.000049<br>SUS-714-ICG | G617.2G rear shock absorber assy | 2 | G40L |
| | 3.206.03.000050<br>SUS-715-ICG | G617.4G rear shock absorber assy | 2 | G60L |
| 8 | 3.01.004.110118<br>3.206.18.000092<br>SUS-754-IC | A617.H8G Rear roll bar assembly | 1 | |
| 9 | 3.205.01.030019<br>HW-ECHD309 | Stainless steel self-locking nut (M10) | 4 | |
| 10 | 3.206.18.000118<br>SUS-711-ICG | G617 rear stabilizer bar connecting rod assembly | 2 | |

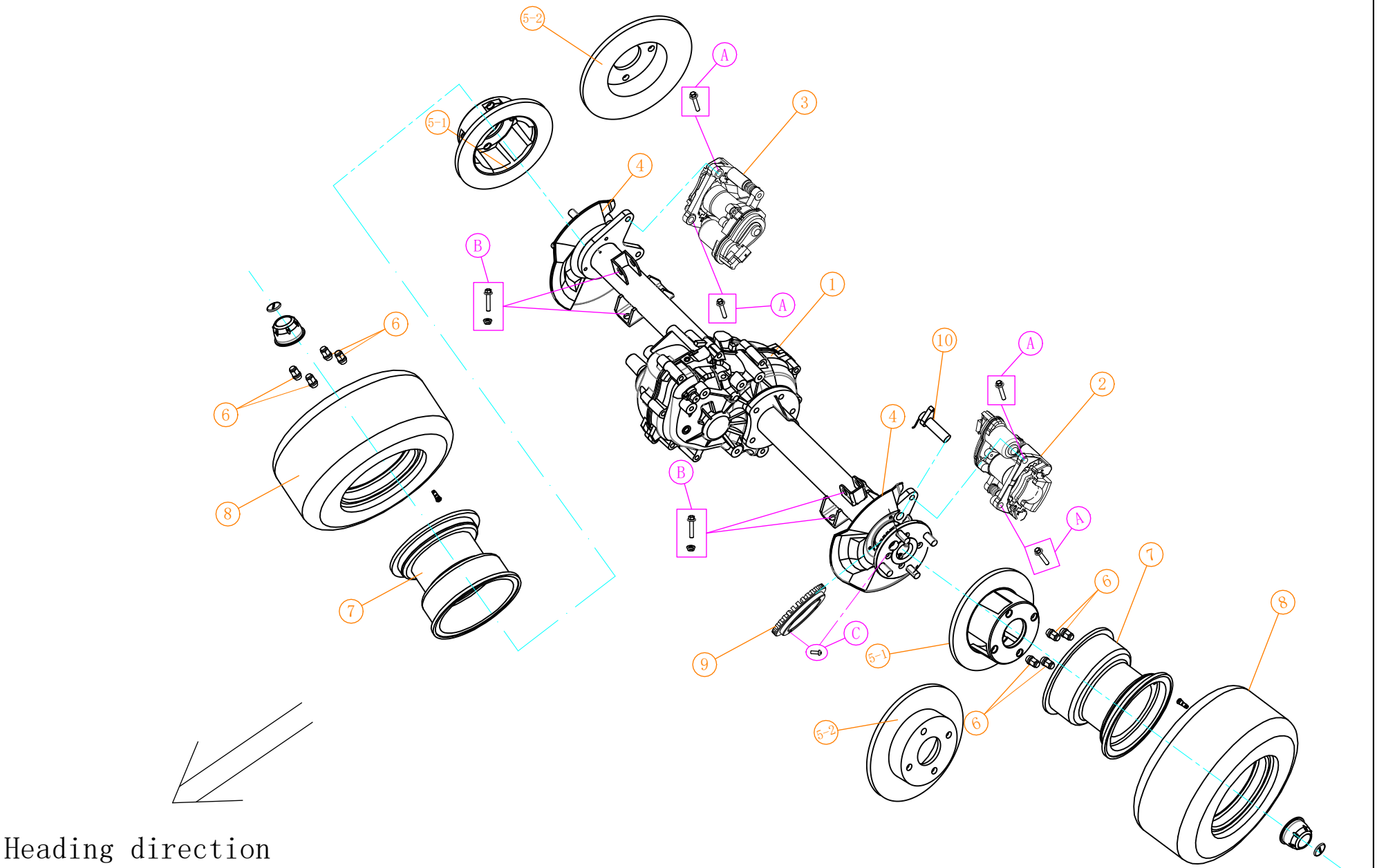
5-2
A
3
5-1
4
B
A
1
6
10
A
2
6
4
B
A
8
7
6
7
8
C
9
5-1
6
5-2
Heading direction

## screw specifications

| NO: | Code | Name | QTY | Remark |
|---|---|---|---|---|
| A | 3.01.003.060008<br>3.205.04.010007<br>HW-248-IC | (12*20)<br>Flange screw | 4 | |
| B | 3.01.003.060050<br>3.205.04.010045<br>HW-258-IC | (12*25)<br>Flange screw | 4 | |
| | 3.01.003.100016<br>3.205.04.030005<br>HW-231-IC | (12mm)<br>Flange self-locking nut | 4 | |
| C | 3.01.003.030039<br>3.205.01.010038<br>HW-234-IC | Stinless steel round head<br>Phillips screw | 4 | 5*25 |

## Transaxle system (1)

| NO: | Code | Name | QTY | Remark |
|---|---|---|---|---|
| 1 | 3.206.04.000194<br>AXEL-800-ICG | G617 disc brake transaxle-A | 1 | G40<br>G60 |
| | 3.206.04.000199<br>AXEL-801-ICG | G617 disc brake transaxle-C | 1 | G40L<br>G60L |
| 2 | 3.01.004.050209<br>3.206.14.000133<br>AXEL-804-ICG | electoronic parking calipers L<br>(Driver) | 1 | |
| 3 | 3.01.004.050210<br>3.206.14.000132<br>AXEL-805-ICG | electoronic parking calipers R<br>(Passenger) | 1 | |
| 4 | 3.01.006.200129<br>3.201.05.000070<br>BRAK-665-IC | A627 disc brake rear axle fender | 2 | Non-lifted four-wheel disc brake |
| | 3.01.006.200103<br>3.206.14.000117<br>SUS-759-IC | A627.2G rear brake disc splash guard-B | 2 | Lifted four-wheel disc brake |
| 5-1 | 3.01.005.010037<br>3.206.14.000046<br>BRAK-624-IC | Φ200 rear brake disc | 2 | G40<br>G60 |
| 5-2 | 3.01.006.200085<br>3.206.14.000116<br>BRAK-625-IC | A627 Rear brake disc for lifted cart | 2 | |
| 6 | 3.01.003.100045<br>3.205.05.030015<br>WT-109-IC | C-hub nuts with caps | 8 | |
| 7 | 3.01.004.020007<br>3.206.06.000015<br>WT-105-IC | LD-A0521070<br>aluminum steel ring | 2 | G40<br>G60<br>10 inch steel ring |
| | 3.01.004.020045<br>3.206.06.000010<br>WT-110-IC | LD-A691275<br>aluminum steel ring | 2 | G40L<br>G60L<br>12 inch steel ring |
| 8 | 3.02.001.000063<br>3.201.01.000023<br>WT-108-IC | brake wheel | 2 | G40<br>G60<br>10 inches |
| | 3.02.001.000062<br>3.201.01.000022<br>WT-111-IC | brake wheel | 2 | G40<br>G60<br>12 inches |
| 9 | 3.01.005.010257<br>3.202.12.000015<br>AXEL-807-ICG | G617 Gear ring for wheel speed sensor | 1 | |
| 10 | 3.03.017.000181<br>3.202.12.000018<br>AXEL-802-ICG | wheel speed sensor | 1 | G40<br>G60 |
| | 3.03.017.000180<br>3.202.12.000017<br>AXEL-803-ICG | wheel speed sensor | 1 | G40L<br>G60L |

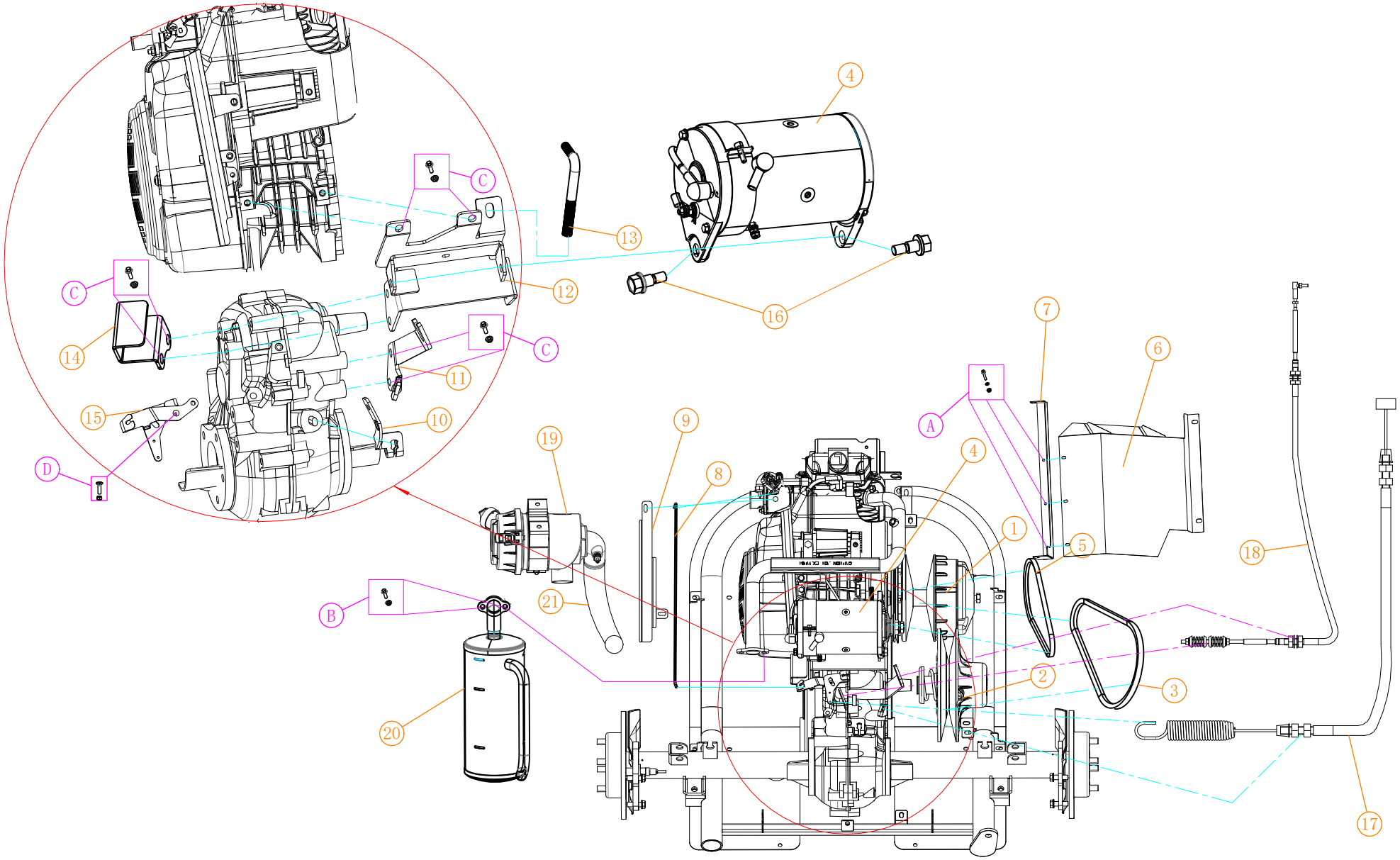
4
C
13
12
16
C
14
C
11
15
10
D
19
9
8
A
4
7
6
1
5
18
B
21
2
3
20
17

## screw specifications

| NO: | Code | Name | QTY | Remark |
|---|---|---|---|---|
| A | 3.01.003.060004<br>3.205.04.010003<br>HW-219-IC | (6*16)<br>Flange screw | 3 | |
| | 3.01.003.100013<br>3.205.04.030002<br>HW-223-IC | (M6)<br>Flange self-locking nut | 3 | |
| B | 3.01.003.060055<br>3.205.04.010047<br>BRAK-901-HD | (8*30)<br>Flange screw | 2 | |
| | 3.01.003.100014<br>3.205.04.030003<br>HW-205-IC | (M8)<br>Flange self-locking nut | 2 | |
| C | 3.01.003.060067<br>3.205.04.010056<br>HW-304-IC | (10*16)<br>Flange screw | 6 | |
| | 3.01.003.100015<br>3.205.04.030004<br>HW-239-IC | (M10)<br>Flange self-locking nut | 6 | |
| D | 3.01.003.030008<br>3.205.01.010019<br>HW-904-ICG | (3*16) Stainless steel round head Phillips screws | 1 | |
| | 3.01.003.100020<br>3.205.05.030004<br>HW-905-ICG | (M3) Outer hexagon Non-lifted nut | 1 | |

## Rear axle

| NO: | Code | Name | QTY | Remark |
|---|---|---|---|---|
| 1 | 3.01.004.010255<br>3.206.04.000140<br>AXEL-808-ICG | CTV drive wheel assembly | 1 | LHQ.04477 |
| 2 | 3.01.004.010256<br>3.206.04.000141<br>AXEL-819-ICG | CTV driven wheel assembly | 1 | EZGO-RXV-SC<br>OEM: 623949 |
| 3 | 3.02.014.000427<br>3.201.16.010173<br>AXEL-822-ICG | CTV belt | 1 | 980*30*12.5 |
| 4 | 3.03.007.000148<br>3.202.09.000131<br>MOTOR-501-ICG | generator starter | 1 | |
| 5 | 3.02.014.000426<br>3.201.16.010172<br>MOTOR-502-ICG | generator belt | 1 | |
| 6 | 2.02.107.000017<br>AXEL-825-ICG | G617 engine hood panel | 1 | |
| 7 | 2.03.107.100017<br>AXEL-826-ICG | engine cover retaining pate | 1 | |
| 8 | 3.01.004.070305<br>3.206.14.000142<br>AXEL-827-ICG | G617 throttle wire pull rod | 1 | |
| 9 | 2.02.107.000019<br>AXEL-806-ICG | G617 throttle wire pull rod baffle | 1 | |
| 10 | 3.206.04.000190<br>AXEL-809-ICG | G617 shift arm | 1 | |
| 11 | 3.206.04.000189<br>AXEL-810-ICG | G617 gear line bracket | 1 | |
| 12 | 2.01.004.220019<br>2.03.107.100009<br>AXEL-811-ICG | G617 starting motor bracket | 1 | |
| 13 | 3.01.003.070137<br>3.205.03.040015<br>AXEL-812-ICG | G617 generator tie rod bolt | 1 | |
| 14 | 3.206.04.000191<br>AXEL-813-ICG | G617 throttle lever guard palte | 1 | |
| 15 | 3.206.04.000192<br>AXEL-814-ICG | G617 throttle support | 1 | |
| 16 | 3.205.04.040004<br>MOTOR-503-ICG | G617 shoulder bolt | 2 | |
| 17 | 3.01.004.040111<br>3.206.08.000104<br>AXEL-815-ICG | G617 cable accelerator | 1 | G40<br>G40L |
| | 3.01.004.040113<br>3.206.08.000106<br>AXEL-816-ICG | G617.4 cable accelerator | 1 | G60<br>G60L |
| 18 | 3.01.004.040110<br>3.206.08.000103<br>AXEL-817-ICG | G617.2 gear pull wire | G40L | G40 1 |
| | 3.01.004.040112<br>3.206.08.000105<br>AXEL-818-ICG | G617.4 gear pull wire | 1 | G60<br>G60L |
| 19 | 3.201.16.010345<br>AXEL-820-ICG | Air fliter | 1 | |
| 20 | | Exhaust barrel | 1 | |
| 21 | 3.201.16.010344<br>AXEL-821-ICG | Air hose | 1 | |

Brake system parys

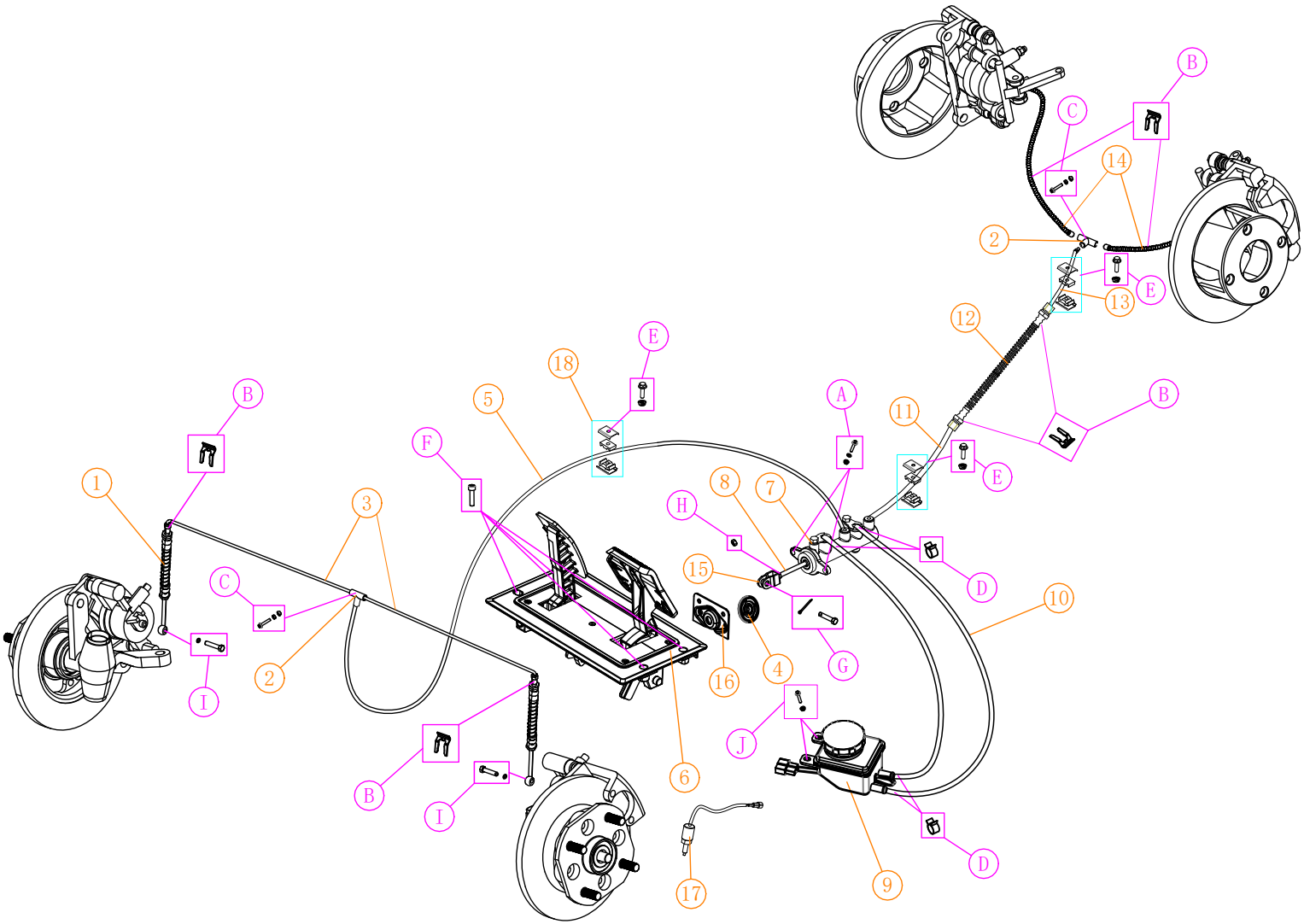

## screw specifications

| NO: | Code | Name | QTY | Remark |
|---|---|---|---|---|
| A | 3.01.003.060055<br>3.205.04.010047<br>BRAK-901-HD | (8*30)<br>Flange screw | 2 | |
| | 3.01.003.100014<br>3.205.04.030003<br>HW-205-IC | (M8)<br>Flange self-locking nut | 2 | |
| | 3.01.003.080004<br>3.205.01.020004<br>HW-207-IC | (1.2*8*20)<br>Flat gasket | 2 | |
| B | 3.01.004.030038<br>3.206.07.000028<br>HW-270-IC | Disc brake tubing card | 6 | |
| C | 3.01.003.060013<br>3.205.04.010011<br>HW-377-IC | (6*30)<br>Flange screw | 2 | |
| | 3.01.003.100013<br>3.205.04.030002<br>HW-223-IC | (M6)<br>Flange self-locking nut | 2 | |
| | 3.01.003.080003<br>3.205.01.020003<br>HW-260-IC | (1.5*6*18)<br>Flat gasket | 2 | |
| D | 3.01.006.000442<br>3.209.02.000100<br>HW-269-IC | Spring clamp | 4 | Ø16 |
| E | 3.01.003.060010<br>3.205.04.010008<br>HW-272-IC | (6*25)<br>Flange screw | 3 | G40<br>G40L |
| | 3.01.003.100009<br>3.205.04.030008<br>HW-220-IC | (M6)<br>Flange self-locking nut | 3 | |
| | 3.01.003.060010<br>3.205.04.010008<br>HW-272-IC | (6*25)<br>Flange screw | 5 | G60<br>G60L |
| | 3.01.003.100009<br>3.205.04.030008<br>HW-220-IC | (M6)<br>Flange self-locking nut | 5 | |
| F | 3.01.003.070068<br>3.205.04.010088<br>HW-414-ECO | (8*25) Hexagon socket round head bolt | 4 | |
| G | 3.01.004.040022<br>3.209.02.000160<br>BRAK-677-IC | Front pin of brake cable | 1 | 10*25 |
| | 3.01.003.090006<br>3.205.05.040003<br>BRAK-ECHD102 | Cotter pin | 1 | 3*50 |
| H | 3.01.003.100022<br>3.205.05.030006<br>BRAK-903-HD | (M8)<br>Flange Non-lifted nut | 1 | |
| I | 3.01.003.070041<br>3.205.03.010001<br>HW-266-IC | Hollow screw | 2 | Ø10 |
| | 3.01.004.030030<br>3.206.14.000070<br>HW-271-IC | S14 Plastic oil pipe gasket | 4 | |
| J | 3.01.003.060004<br>3.205.04.010003<br>HW-219-IC | (6*16)<br>Flange screw | 2 | |
| | 3.01.003.100013<br>3.205.04.030002<br>HW-223-IC | (6mm)<br>Flange self-locking nut | 2 | |
| | | | | |
| | | | | |
| | | | | |
| | | | | |
| | | | | |

## Brake system parys

| NO: | Code | Name | QTY | Remark |
|---|---|---|---|---|
| 1 | 3.01.004.030042<br>3.206.07.000033<br>BRAK-639-IC | Type A car front soft oil pipe | 2 | 500mm<br>Non-lifted version |
| 2 | 3.01.004.050028<br>3.206.14.000026<br>BRAK-637-IC | Disc brake tee | 2 | |
| 3 | 3.01.004.030061<br>3.206.07.000013<br>BRAK-668-IC | Brake steel oil pipe 250 | 2 | G40L<br>G60L |
| 4 | 3.01.004.050080<br>3.201.11.000124<br>BRAK-643-IC | Brake master cylinder dustproof rubber pad | 1 | |
| 5 | 3.01.004.030009<br>3.206.07.000004<br>BRAK-667-IC | Brake steel oil pipe 750 | 1 | |
| 6 | 3.206.14.000176<br>BRAK-701-ICG | G617-BHydraudlc brake pedal assy | 1 | |
| 7 | 3.01.004.050005<br>3.206.14.000006<br>BRAK-601-IC | Brake master cylinder | 1 | 7/8 |
| 8 | 3.01.006.900067<br>3.205.03.040007<br>BRAK-908-HD | S14 Brake master cylinder putter | 1 | |
| 9 | 3.01.004.050184<br>3.206.14.000134<br>BRAK-912-HD | Brake oil tank-B | 1 | |
| 10 | 3.01.004.030039<br>3.206.07.000046<br>BRAK-627-IC | Oil tank pipe | 2m | |
| 11 | 3.01.004.030006<br>3.206.07.000009<br>BRAK-631-IC | Brake steel oil pipe 250 | 1 | G40<br>G40L |
| | 3.01.004.030005<br>3.206.07.000023<br>BRAK-671-IC | Brake steel oil pipe 1010 | 1 | G60<br>G60L |
| 12 | 3.01.004.030009<br>3.206.07.000004<br>BRAK-667-IC | G617 rear soft oil pipe | 1 | |
| 13 | 3.01.004.030009<br>3.206.07.000004<br>BRAK-667-IC | Brake steel oil pipe1210 | 1 | |
| 14 | 3.01.004.030040<br>3.206.07.000026<br>BRAK-636-IC | Rear plastic oil pipe | 2 | 600mm |
| 15 | 3.01.004.050154<br>3.206.14.000037<br>BRAK-657-IC | Connecting fork | 1 | |
| 16 | 2.01.004.050081<br>2.03.101.100116<br>BRAK-646-IC | Brake master cylinder fixed plate | 1 | |
| 17 | 3.03.002.000107<br>3.202.02.020065<br>BRAK-ECHD100 | A827 waterproof Brake light switch | 1 | |
| 18 | 3.01.006.000117<br>3.201.16.020170<br>BRAK-645-IC | Locking buckle | 3 | G40<br>G60 |
| | | | 5 | G40L<br>G60L |
| | | | | |
| | | | | |
| | | | | |
| | | | | |
| | | | | |

Non-lifted version

Front body cover(1)

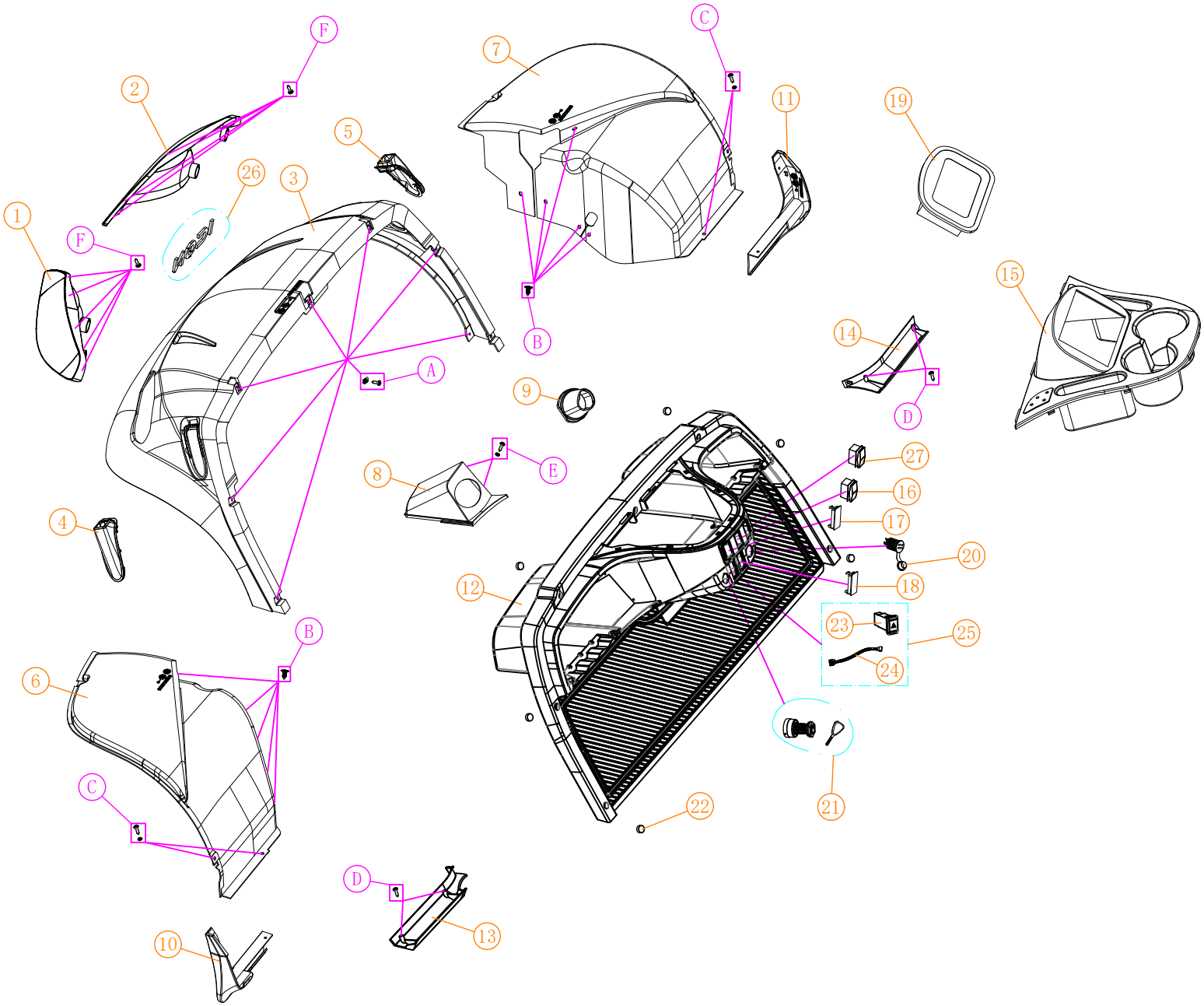

## screw specifications

| NO: | Code | Name | QTY | Remark |
|---|---|---|---|---|
| A | 3.01.003.030049<br>3.205.01.010044<br>HW-279-IC | Stainless steel large flat head self-tapping screws (5*20) | 7 | |
| | 3.01.003.100079<br>3.205.03.030018<br>HW-278-IC | Self-tapping reed nut (M5) | 7 | |
| B | 3.02.014.000113<br>3.201.16.010147<br>HW-214-IC | Round head plastic pull stud | 10 | |
| C | 3.01.003.110008<br>3.205.04.010082<br>HW-381-IC | （5*20）Stainless steel large flat head tapping screw | 4 | |
| | 3.01.003.080008<br>3.205.01.020007<br>HW-316-IC | （1*5*12）<br>Flat gasket | 4 | |
| D | 3.01.003.030049<br>3.205.01.010044<br>HW-279-IC | （5*20）Stainless steel large flat head tapping screw | 8 | |
| E | 3.01.003.010005<br>3.205.01.010003<br>HW-284-IC | （4*16）Stainless steel wood grain round head Phillips screw | 2 | |
| | 3.01.003.080033<br>3.205.01.020016<br>BD-ECHD425 | （1*5*10）<br>Flat gasket | 2 | |
| F | 3.01.003.100133<br>3.205.01.010174<br>BD-547-ECO | （4*16）Stainless steel large flat head tapping screw | 4 | |
| | | | | |
| | | | | |
| | | | | |
| | | | | |
| | | | | |
| | | | | |
| | | | | |
| | | | | |
| | | | | |
| | | | | |
| | | | | |
| | | | | |
| | | | | |
| | | | | |
| | | | | |

Non-lifted cart

| | | | | |
|---|---|---|---|---|
| 26 | 4.04.002.000142<br>4.01.005.010155<br>BD-701-IC | Front Cover LOGO | 1 | |
| 27 | 3.202.02.010031<br>FNR-502-IC | Rocker switch (unlocked) | 1 | |

## Front body cover(1)

| NO: | Code | Name | QTY | Remark |
|---|---|---|---|---|
| 1 | 3.202.01.010051<br>LIGHT-707-IC | B617 Integrated front head light/L (Driver) | 1 | |
| 2 | 3.202.01.010052<br>LIGHT-708-IC | B617 Integrated front head light/R(Passenger) | 1 | |
| 3 | 2.02.001.220001<br>2.04.105.200001<br>BD-142-HD | B617 front cover (painted parts) | 1 | Pearl White |
| 4 | 3.02.014.000412<br>3.201.11.000135<br>BD-ECHD434 | B617 Front support decoration cover/L(Driver) | 1 | |
| 5 | 3.02.014.000413<br>3.201.11.000136<br>BD-ECHD435 | B617 Front support decoration cover/R (Passenger) | 1 | |
| 6 | 3.02.011.900094<br>3.201.05.000060<br>BD-ECHD416 | B617 front fender L(Driver) | 1 | |
| 7 | 3.02.011.900095<br>3.201.05.000061<br>BD-ECHD417 | B617 front fender R (Passenger) | 1 | |
| 8 | 2.06.003.000114<br>SR-302-ICG | B617 steering column trim cover | 1 | |
| 9 | 3.02.014.000414<br>3.201.11.000134<br>BD-ECHD419 | B617 steering column rubber sleeve | 1 | |
| 10 | 3.02.011.900100<br>3.201.05.000068<br>BD-ECHD428 | B617 front fender L (Driver) | 1 | |
| 11 | 3.02.011.900101<br>3.201.05.000069<br>BD-ECHD418 | B617 front fender R (Passenger) | 1 | |
| 12 | 2.06.003.000113<br>DSH-401-ICG | B617 Front dashboard | 1 | |
| 13 | 2.06.003.000115<br>BD-320-ICG | B617 ball cabinet glue L (Driver) (outsourced processing) | 1 | |
| 14 | 2.06.003.000116<br>BD-321-ICG | B617 ball cabinet glue R(Passenger) (outsourced processing) | 1 | |
| 15 | 2.06.003.000131<br>DSH-402-ICG | B617 water cup holder-B | 1 | |
| 16 | 3.202.02.010027<br>FNR-501-IC | Rocker switch (parking) | 1 | |
| 17 | 3.03.007.000041<br>3.201.13.000060<br>BD-724-IC | A627 front and rear gear switch cover | 1 | |
| 18 | 3.03.007.000040<br>3.201.13.000059<br>BD-720-IC | A617 battery indication cover | 1 | |
| 19 | 3.202.11.000067<br>CHGR-901-ICG | Fuel vehicle instrument | 1 | |
| 20 | 3.03.001.000180<br>3.202.16.030199<br>BD-133-HD | USB+Type-C connector | 1 | |
| 21 | 3.03.002.000101<br>3.202.02.020048<br>EG-701-IC | Ignition switch-A (ICON) | 1 | ST-40A (Common key) |
| 22 | 3.02.010.000019<br>3.201.13.000012<br>BD-ECHD420 | Wood screw cover | 6 | |
| 23 | 3.03.002.000003<br>3.202.02.020002<br>LIGHT-714-IC | Double flashlight switch | 1 | |
| 24 | 3.03.004.900270<br>3.202.04.000205<br>LIGHT-710-IC | Double flashlight harness | 1 | |
| 25 | 5.01.002.300398<br>2.08.005.000003<br>LIGHT-711-IC | Double flashlight switch assy | 1 | |

Lifted version (unmarked parts are the same as the regular version)

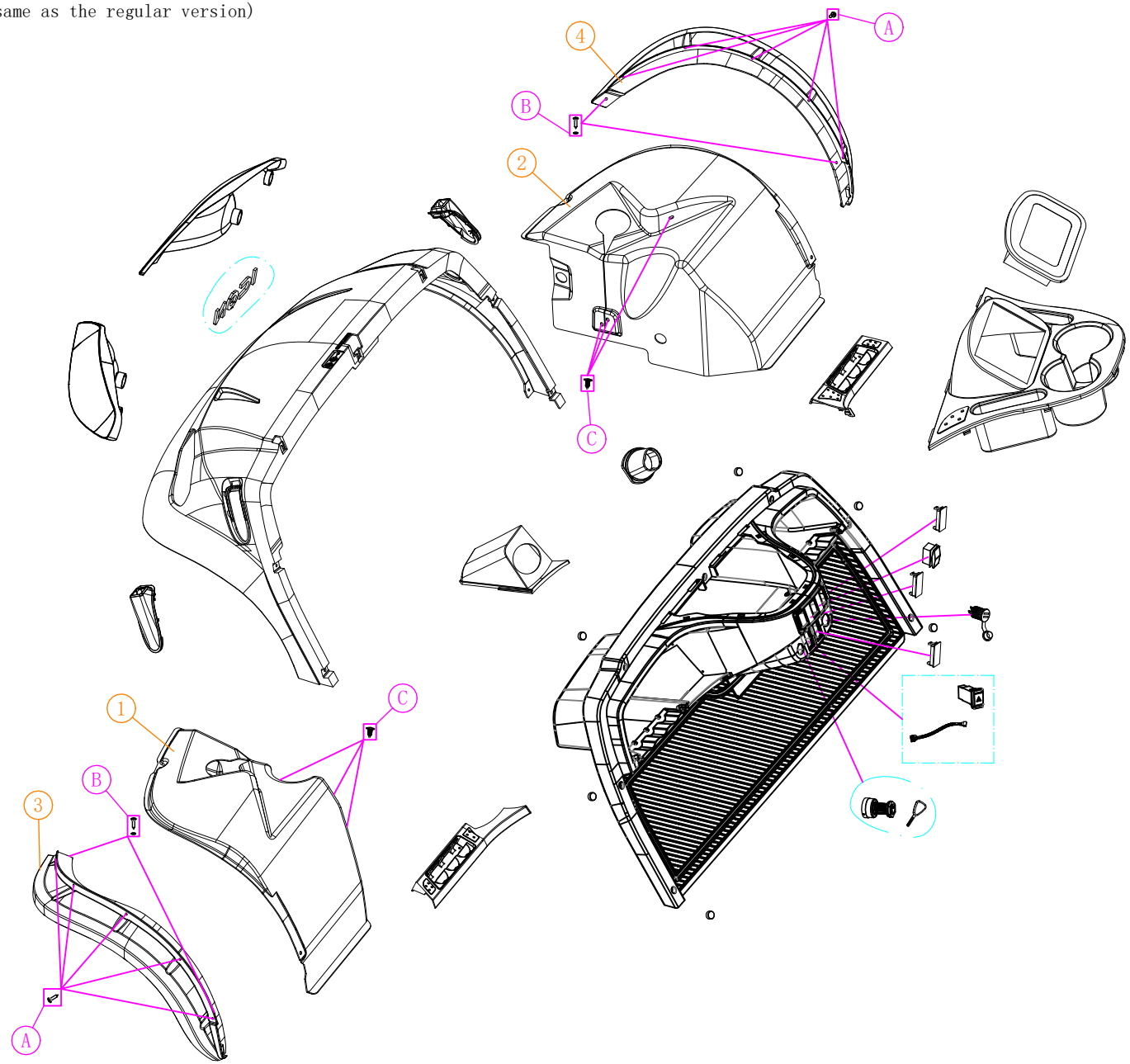


## Front body cover(2)

| NO: | Code | Name | QTY | Remark |
|---|---|---|---|---|
| 1 | 3.201.05.000064<br>BD-ECHD429 | B617 Front Fender for lifted cart/L(Driver) | 1 | |
| 2 | 3.201.05.000065<br>BD-ECHD430 | B617 Front Fender for lifted cart/R(Passenger) | 1 | |
| 3 | 3.02.011.900088<br>3.201.06.000053<br>BD-ECHD431 | B617<br>Front wheel trims/L(Driver) | 1 | |
| 4 | 3.02.011.900089<br>3.201.06.000054<br>BD-ECHD432 | B617<br>Front wheel trims/R(Passenger) | 1 | |
| | | | | |
| | | | | |
| | | | | |
| | | | | |
| A | 3.01.003.100103<br>3.205.01.010133<br>HW-281-IC | (5*16) Stainless steel large flat head cross tapping screw | 12 | |
| B | 3.01.003.030049<br>3.205.01.010044<br>HW-279-IC | (5*20) Stainless steel large flat head tapping screw | 4 | |
| | 3.01.003.080008<br>3.205.01.020007<br>HW-316-IC | (1*5*12)<br>Flat gasket | 4 | |
| C | 3.02.014.000113<br>3.201.16.010147<br>HW-214-IC | Round head plastic pull stud | 6 | |
| | | | | |
| | | | | |
| | | | | |
| | | | | |
| | | | | |
| | | | | |
| | | | | |
| | | | | |
| | | | | |
| | | | | |
| | | | | |
| | | | | |
| | | | | |

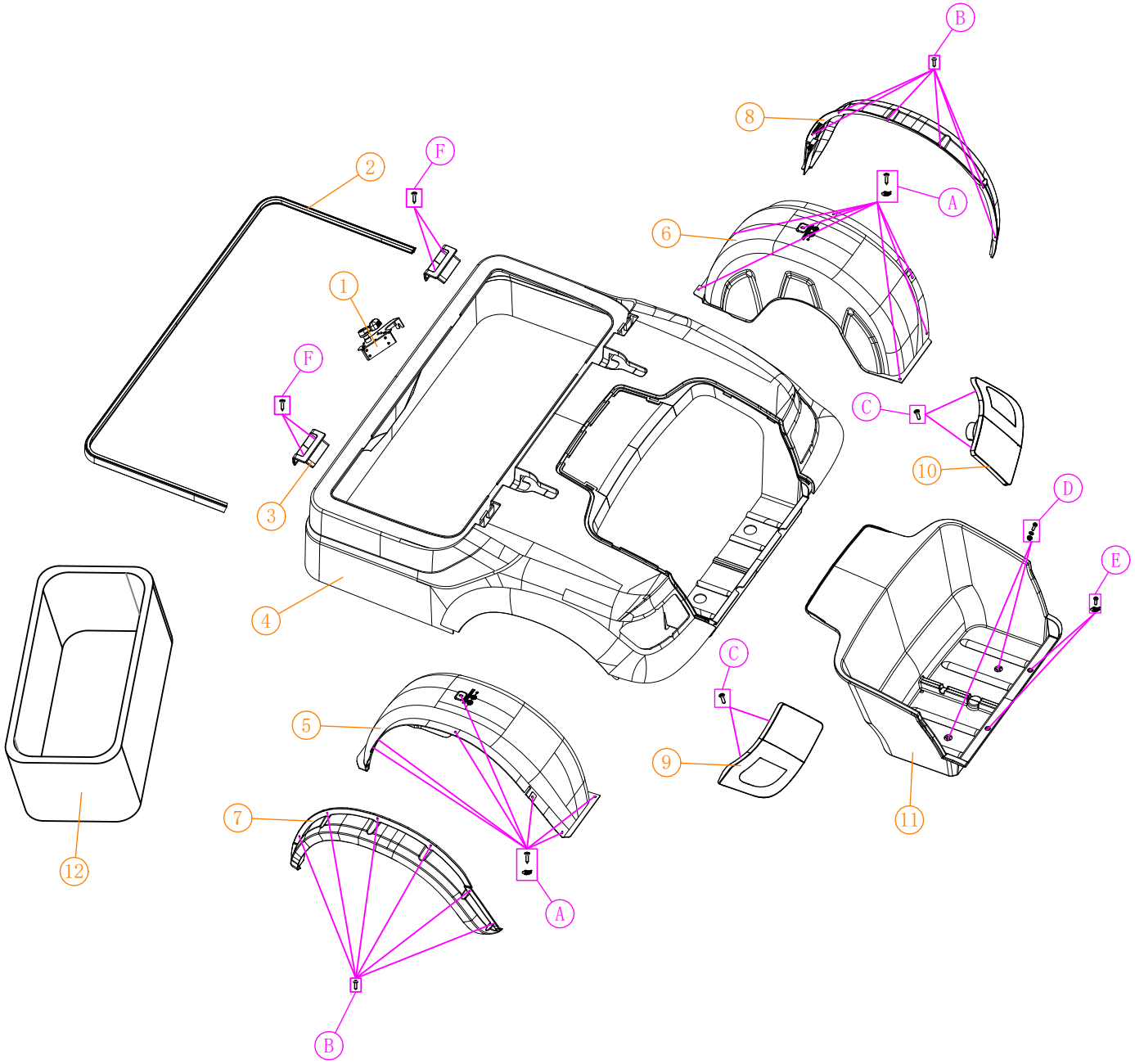


## Rear body cover(1)

| NO: | Code | Name | QTY | Remark |
|---|---|---|---|---|
| 1 | 3.03.002.000110<br>3.202.16.030156<br>BD-322-ICG | Infinite gear shifter | 1 | |
| 2 | 3.02.011.000232<br>3.201.16.010200<br>BD-538-ECO | B617 buckets tape | 1 | |
| 3 | 3.02.011.900109<br>3.201.16.010198<br>BD-537-ECO | B617 Rear safety belt cover | 2 | |
| 4 | 3.02.011.900071<br>3.201.02.010060<br>BD-507-ECO | G617 rear cover-B | 1 | injection model |
| 5 | 3.02.011.900096<br>3.201.05.000062<br>BD-512-ECO | B617 Rear Fender L(Driver) | 1 | |
| 6 | 3.02.011.900097<br>3.201.05.000063<br>BD-513-ECO | B617 Rear Fender R(Passenger) | 1 | |
| 7 | 3.02.011.900090<br>3.201.06.000055<br>BD-525-ECO | B617 rear wheel trims/ L(Driver) | 1 | G40L<br>G60L |
| 8 | 3.02.011.900091<br>3.201.06.000056<br>BD-526-ECO | B617 rear wheel trims/ R(Passenger) | 1 | G40L<br>G60L |
| 9 | 3.03.001.900062<br>3.202.01.010006<br>LIGHT-704-IC | A617 rear light/L(Driver) | 1 | |
| 10 | 3.03.001.900063<br>3.202.01.010007<br>LIGHT-705-IC | A617 rear light/R(Passenger) | 1 | |
| 11 | 3.02.011.900108<br>3.201.16.010197<br>BD-536-ECO | B617 Cartridge box | 1 | injection model |
| 12 | 3.201.10.000090<br>BD-323-ICG | G617-B Rear cowl soundproofing foam | 1 | |
| | | | | |
| | | | | |
| | | | | |
| A | 3.01.003.110003<br>3.205.04.010077<br>HW-228-IC | （5*16） Cross recessed large flat head tapping screw | 10 | |
| | 3.01.003.100079<br>3.205.03.030018<br>HW-278-IC | (M5*13*20)<br>Clip nut | 10 | |
| B | 3.01.003.100103<br>3.205.01.010133<br>HW-281-IC | （5*16） Stainless steel large flat head cross tapping screw | 14 | |
| C | 3.01.003.010005<br>3.205.01.010003<br>HW-284-IC | （4*16）Stainless steel falt head cross tapping screw | 8 | |
| D | 3.01.003.030037<br>3.205.01.010036<br>HW-202-IC | (6*16) Stainless steel big flat head Phillips screw | 2 | |
| | 3.01.003.100013<br>3.205.04.030002<br>HW-223-IC | (M6)<br>Flange self-locking nut | 2 | |
| | 3.01.003.080003<br>3.205.01.020003<br>HW-260-IC | （1.2*6*18）<br>Flat gasket | 2 | |
| E | 3.01.003.030034<br>3.205.01.010033<br>HW-346-IC | (6*20) Stainless steel big head Phillips screw | 2 | |
| | 3.01.003.100080<br>3.205.03.030011<br>HW-283-IC | (M6)<br>Clip nut | 2 | |
| F | 3.01.003.100103<br>3.205.01.010133<br>HW-281-IC | （5*16） Stainless steel large flat head cross tapping screw | 4 | |

Non-lifted cart

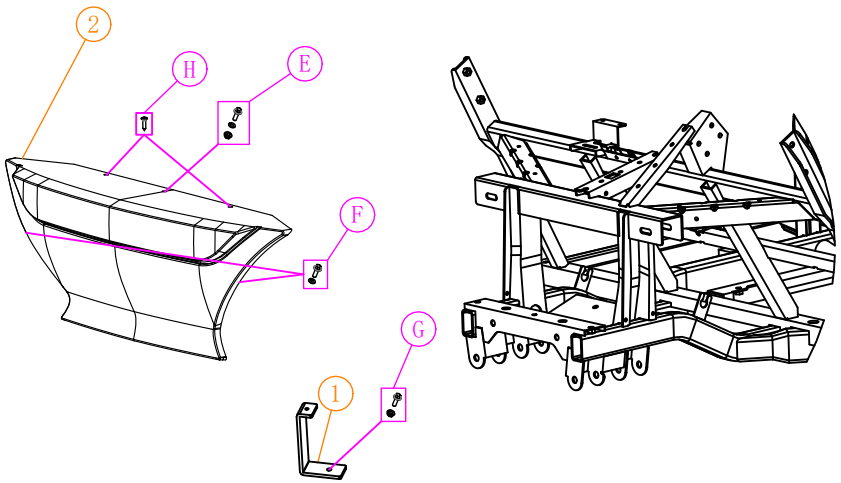




Lifted cart

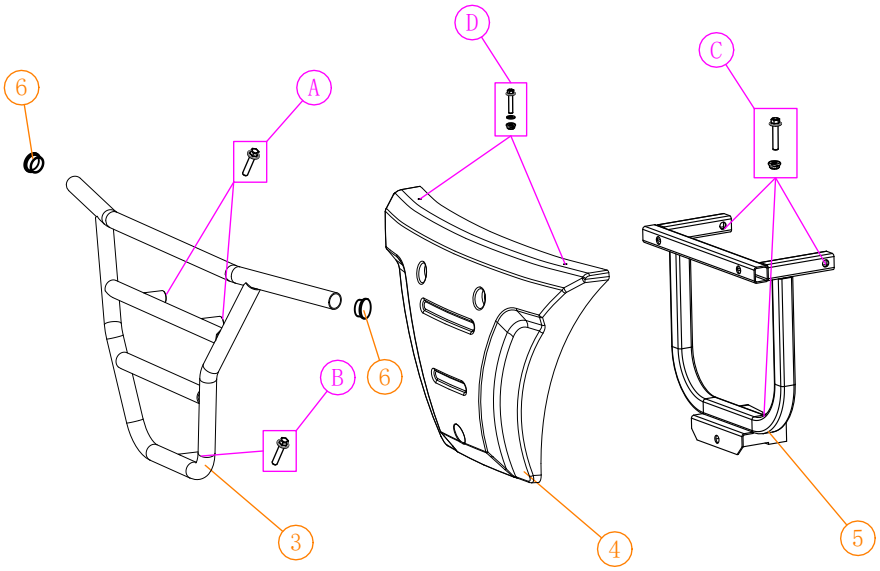


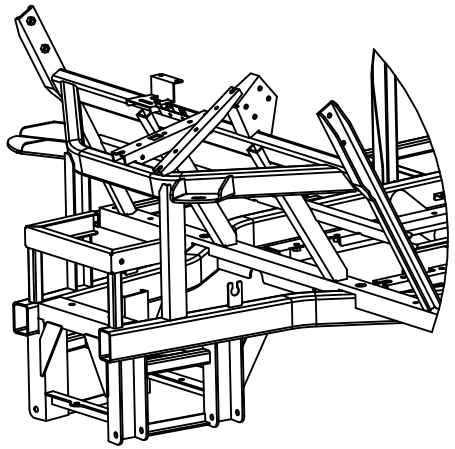

## Front bumper

| NO: | Code | Name | QTY | Remark |
|---|---|---|---|---|
| 1 | 2.01.007.800083<br>2.03.103.100084<br>HW-277-IC | A627 front bumper mounting plate | 1 | |
| 2 | 3.02.011.300065<br>3.201.16.010029<br>BD-533-ECO | A627 front bumper-B | 1 | |
| 3 | 2.01.004.011362<br>2.03.105.100008<br>BD-ECHD414 | B617.2G front bumper for lifted cart | 1 | |
| 4 | 3.02.014.000162<br>3.201.16.010004<br>BD-739-IC | A627 front bumper for lifted cart | 1 | |
| 5 | 2.01.004.040035<br>2.03.103.100012<br>BD-834-IC | A627.2G front bumper fixed | 1 | |
| 6 | 3.02.010.000020<br>3.201.13.000042<br>HW-302-IC | M2 handrail decoration cover | 2 | |
| | | | | |
| A | 3.01.003.060024<br>3.205.04.010021<br>HW-303-IC | (10*45)<br>Flange screw | 2 | |
| B | 3.01.003.060067<br>3.205.04.010056<br>HW-304-IC | (10*20)<br>Flange screw | 1 | |
| C | 3.01.003.060020<br>3.205.04.010017<br>HW-211-IC | (8*40)<br>Flange screw | 3 | |
| | 3.01.003.100014<br>3.205.04.030003<br>HW-205-IC | (M8)<br>Flange self-locking nut | 3 | |
| D | 3.01.003.060005<br>3.205.04.010004<br>HW-209-IC | (6*20)<br>Flange screw | 2 | |
| | 3.01.003.100013<br>3.205.04.030002<br>HW-223-IC | (M6)<br>Flange self-locking nut | 2 | |
| | 3.01.003.080003<br>3.205.01.020003<br>HW-260-IC | (1.5*6*18)<br>Flat gasket | 2 | |
| E | 3.01.003.060005<br>3.205.04.010004<br>HW-209-IC | (6*20)<br>Flange screw | 1 | |
| | 3.01.003.100013<br>3.205.04.030002<br>HW-223-IC | (M6)<br>Flange self-locking nut | 1 | |
| | 3.01.003.080003<br>3.205.01.020003<br>HW-260-IC | (1.5*6*18)<br>Flat gasket | 1 | |
| F | 3.01.003.060006<br>3.205.04.010005<br>HW-208-IC | (8*20)<br>Flange screw | 2 | |
| | 3.01.003.080004<br>3.205.01.020004<br>HW-207-IC | (1.2*8*20)<br>Flat gasket | 2 | |
| G | 3.01.003.060006<br>3.205.04.010005<br>HW-208-IC | (8*20)<br>Flange screw | 1 | |
| | 3.01.003.100014<br>3.205.04.030003<br>HW-205-IC | (M8)<br>Flange self-locking nut | 1 | |
| H | 3.01.003.110013<br>3.205.04.010085<br>HW-338-IC | (4.8*20) Stainless steel large flat head tapping screw | 4 | |
| | | | | |
| | | | | |
| | | | | |

B627.2+2-B/2+2G-B

Top roof (1)

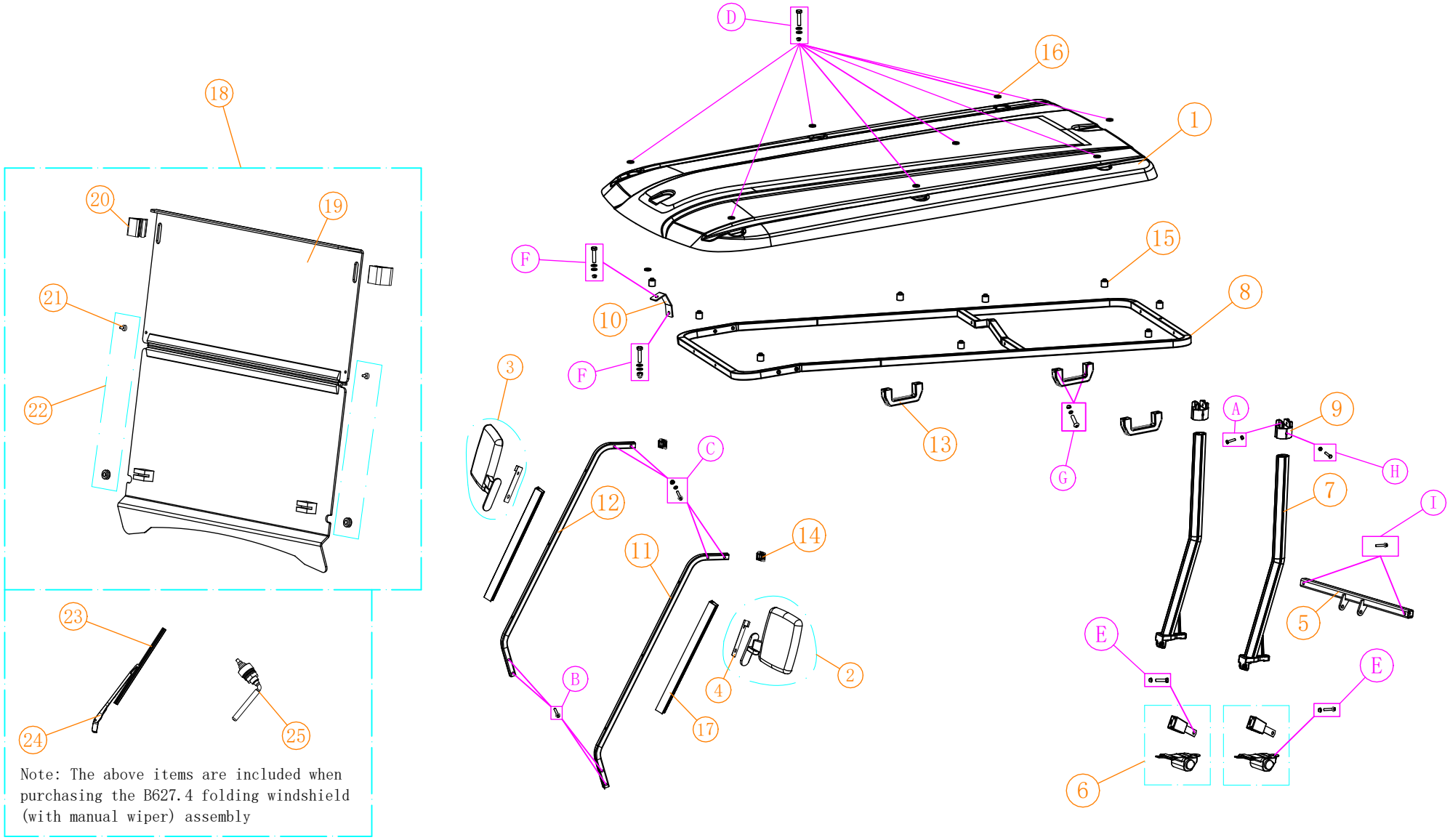


Note: The above items are included when purchasing the B627.4 folding windshield (with manual wiper) assembly

## screw specifications

| NO: | Code | Name | QTY | Remark |
|---|---|---|---|---|
| A | 3.01.003.050011<br>3.205.01.010091<br>HW-311-IC | (8*50) Stainless steel hexagon screw | 2 | |
| | 3.01.003.100008<br>3.205.01.030008<br>HW-299-IC | (M8)<br>Stainless steel nut | 2 | |
| B | 3.01.003.060027<br>3.205.04.010024<br>HW-206-IC | (8*50)<br>Flange screw | 4 | |
| C | 3.01.003.050050<br>3.205.01.010106<br>HW-325-IC | (8*75)<br>Stainless steel hexagon screw | 4 | |
| | 3.01.003.100008<br>3.205.01.030008<br>HW-299-IC | (M8)<br>Stainless steel nut | 4 | |
| | 3.01.003.080004<br>3.205.01.020004<br>HW-207-IC | (1.2*8*20)<br>Flat gasket | 4 | |
| D | 3.01.003.050050<br>3.205.01.010106<br>HW-325-IC | (8*75)<br>Stainless steel hexagon screw | 8 | |
| | 3.01.003.100008<br>3.205.01.030008<br>HW-299-IC | (M8)<br>Stainless steel nut | 8 | |
| | 3.01.003.080004<br>3.205.01.020004<br>HW-207-IC | (1.2*8*20)<br>Flat gasket | 16 | |
| E | 3.205.01.010183<br>HW-ECHD308 | (10*20)<br>Stainless steel hexagon screw | 2 | |
| | 3.205.01.030019<br>HW-ECHD309 | (10mm)<br>Stainless steel nut | 2 | |
| F | 3.01.003.050053<br>3.205.01.010109<br>HW-306-IC | (8*45)<br>Stainless steel hexagon screw | 2 | |
| | 3.01.003.100008<br>3.205.01.030008<br>HW-299-IC | (M8)<br>Stainless steel nut | 2 | |
| | 3.01.003.080004<br>3.205.01.020004<br>HW-207-IC | (1.2*8*20)<br>Flat gasket | 4 | |
| G | 3.01.003.070090<br>3.205.01.010126<br>HW-403-ECO | (8*45) Hexagon socket flat round head screws | 6 | |
| | 3.01.003.080004<br>3.205.01.020004<br>HW-207-IC | (1.2*8*20)<br>Flat gasket | 6 | |
| | 3.01.003.100008<br>3.205.01.030008<br>HW-299-IC | (M8)<br>Stainless steel nut | 6 | |
| H | 3.01.003.050048<br>3.205.01.010104<br>HW-308-IC | (8*70) Stainless steel hexagon screw | 2 | |
| | 3.01.003.100008<br>3.205.01.030008<br>HW-299-IC | (M8)<br>Stainless steel nut | 2 | |
| I | 3.01.003.050010<br>3.205.01.010090<br>HW-307-IC | (8*40) Stainless steel hexagon screw | 2 | |
| | | | | |
| | | | | |
| | | | | |
| | | | | |
| | | | | |

## G40/2+2G-B

| | | | | |
|---|---|---|---|---|
| 21 | 3.02.012.000050<br>3.204.04.000013<br>HW-385-IC | Folding glass adhesive pad | 2 | |
| 22 | 3.02.012.000059<br>3.204.04.000017<br>WS-705-IC | A627 Fold windshield rubber assy | 2 | |
| 23 | 3.202.08.000043<br>SLA-808-IC | A617 Fold windshield rubber assy | 1 | |
| 24 | 3.202.08.000042<br>SLA-809-IC | A617 Fold windshield rubber assy | 1 | |
| 25 | 3.202.08.000041<br>SLA-811-IC | A617 Fold windshield rubber assy | 1 | |

## Top roof (1)

| NO: | Code | Name | QTY | Remark |
|---|---|---|---|---|
| 1 | 2.02.001.180038<br>2.04.102.100070<br>TOP-449-IC | A617.4 Top roof (painted parts) | 1 | Pearl White |
| 2 | 3.02.013.000026<br>3.201.07.000042<br>ACS-719-IC | 627 Side mirror/L(Driver) | 1 | |
| 3 | 3.02.013.000024<br>3.201.07.000043<br>ACS-720-IC | 627 Side mirror/L(Driver) | 1 | |
| 4 | 3.02.013.000057<br>3.201.07.000004<br>TOP-608-HD | A617 rearview mirror rubber pad | 1 | |
| 5 | 2.01.007.700013<br>2.03.104.100006<br>ST-140-ECO | 827.2 Seat belt lock seat | 1 | |
| 6 | 3.201.16.050019<br>ST-909-IC | Automatic locking two-point safety belt | 2 | |
| 7 | 2.03.105.000006<br>TOP-501-ECO | B617.2+2 Top roof rear support | 2 | frosted matte black |
| 8 | 2.03.105.000032<br>TOP-517-ECO | B617.2+2 Top roof rack (aluminum material) | 1 | frosted matte black |
| 9 | 3.201.16.010201<br>TOP-515-ECO | B617 roof rear support connection seat (with 30 aluminum tube) | 2 | |
| 10 | 2.03.102.100013<br>TOP-ECHD700 | A617.2 top roof support plate | 1 | frosted matte black |
| 11 | 2.03.106.000005<br>TOP-801-ICG | B627 front windshield bracket-A/L (Driver) | 1 | frosted matte black |
| 12 | 2.03.106.000006<br>TOP-802-ICG | B627 front windshield bracket-A/R (Passenger) | 1 | frosted matte black |
| 13 | 3.02.011.800068<br>3.201.02.010022<br>TOP-521-ECO | 827 top roof armrest/L (Driver) | 3 | black |
| 14 | 3.02.010.000030<br>3.201.13.000036<br>TOP-ECHD703 | 30 aluminum square tube plugging cover | 2 | |
| 15 | 3.02.011.000041<br>3.201.02.010057<br>HW-374-IC | Top roof rubber column | 9 | |
| 16 | 3.02.011.000040<br>3.201.02.010056<br>HW-373-IC | Top roof rubber collar | 9 | |
| 17 | 3.204.04.000031<br>WS-905-ECO | Windshield clip (with 30 aluminum square tube) | 2 | |
| 18 | 3.204.02.000056<br>WS-903-ECO | B627.4 folding windshield assembly | 1 | |
| | 3.204.02.000057<br>WS-906-ECO | B627.4 foldable windshield assy | 1 | Brown |
| | 3.204.02.000058<br>WS-907-ECO | B627.4 foldable windshield assy | 1 | With DOT certification |
| | 3.204.02.000059<br>WS-908-ECO | B627.4 foldable windshield assy | 1 | Equipped with manual wiper with DOT certification |
| 19 | 3.204.02.000024<br>WS-710-IC | A617.4 foldable windshield | 1 | |
| | 3.204.02.000043<br>WS-401-ICG | A617.4 foldable windshield | 1 | With DOT certification |
| | 3.204.02.000039<br>WS-720-IC | A617.4 foldable windshield (Dark brown) | 1 | |
| 20 | 3.204.04.000030<br>3.204.04.000030<br>WS-904-ECO | Glue on folding glass (with 30 aluminum square tube) | 2 | |

B627.4+2-B/4+2G-B

Top roof (2)

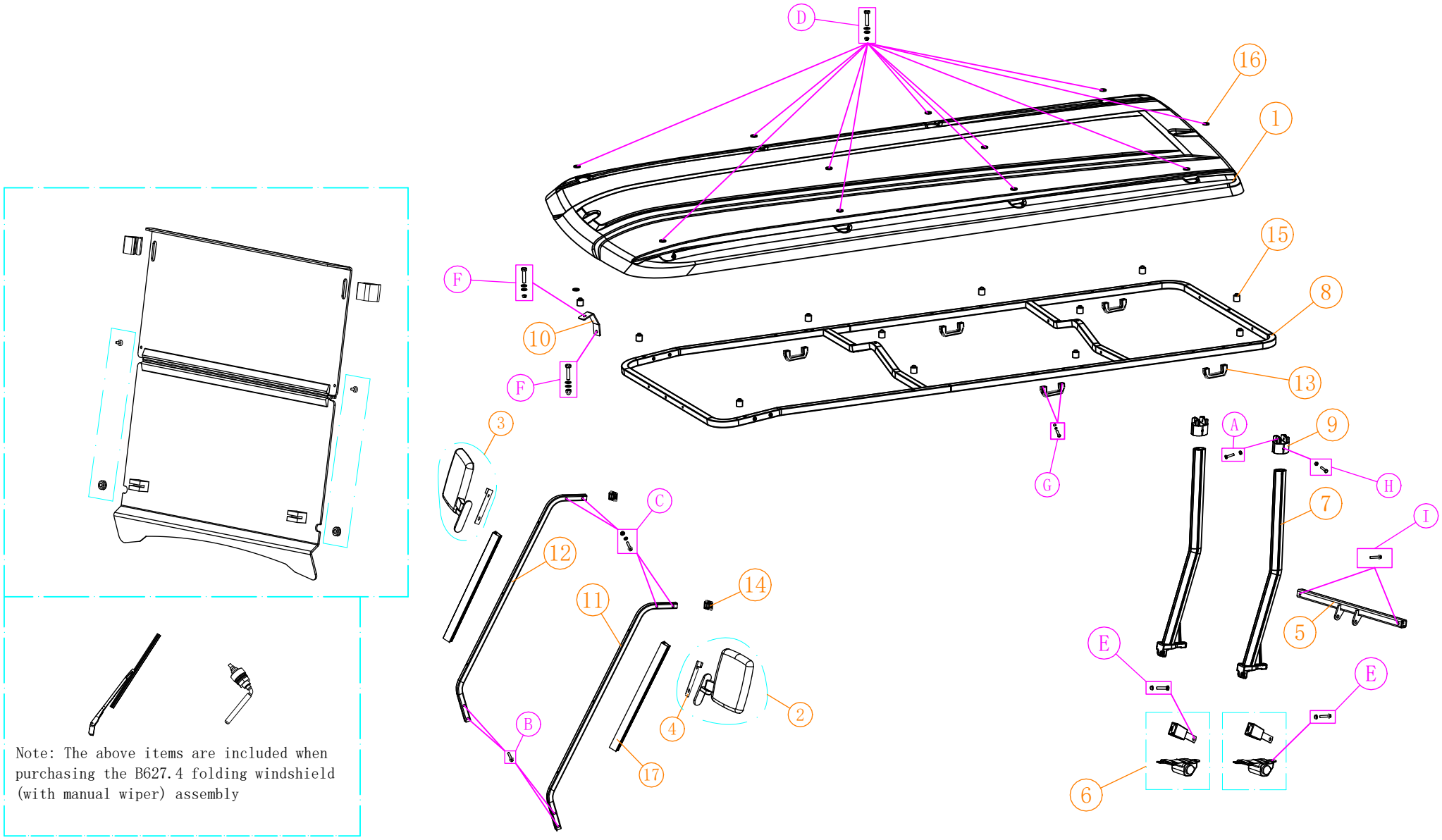

## screw specifications

| NO: | Code | Name | QTY | Remark |
|---|---|---|---|---|
| A | 3.01.003.050011<br>3.205.01.010091<br>HW-311-IC | Stainless steel external hexagonal screws (8*50) | 2 | |
| | 3.01.003.100008<br>3.205.01.030008<br>HW-299-IC | (M8)<br>Stainless steel self-locking nut | 2 | |
| B | 3.01.003.060027<br>3.205.04.010024<br>HW-206-IC | (8*50)<br>Flange screw | 4 | |
| C | 3.01.003.050050<br>3.205.01.010106<br>HW-325-IC | (8*75)<br>Stainless steel hexagon screw | 4 | |
| | 3.01.003.100008<br>3.205.01.030008<br>HW-299-IC | (M8)<br>Stainless steel self-locking nut | 4 | |
| | 3.01.003.080004<br>3.205.01.020004<br>HW-207-IC | (1.2*8*20)<br>Flat gasket | 4 | |
| D | 3.01.003.050050<br>3.205.01.010106<br>HW-325-IC | (8*75)<br>Stainless steel hexagon screw | 11 | |
| | 3.01.003.100008<br>3.205.01.030008<br>HW-299-IC | (M8)<br>Stainless steel self-locking nut | 11 | |
| | 3.01.003.080004<br>3.205.01.020004<br>HW-207-IC | (1.2*8*20)<br>Flat gasket | 22 | |
| E | 3.205.01.010183<br>HW-ECHD308 | (10*20)<br>Stainless steel hexagon screw | 2 | |
| | 3.205.01.030019<br>HW-ECHD309 | (10mm)<br>Stainless steel self-locking nut | 2 | |
| F | 3.01.003.050053<br>3.205.01.010109<br>HW-306-IC | (8*45)<br>Stainless steel hexagon screw | 2 | |
| | 3.01.003.100008<br>3.205.01.030008<br>HW-299-IC | (M8) Stainless steel self-locking nut | 2 | |
| | 3.01.003.080004<br>3.205.01.020004<br>HW-207-IC | (1.2*8*20)<br>Flat gasket | 4 | |
| G | 3.01.003.070090<br>3.205.01.010126<br>HW-403-ECO | (8*45) Hexagon socket flat round head screws | 10 | |
| | 3.01.003.080004<br>3.205.01.020004<br>HW-207-IC | (1.2*8*20)<br>Flat gasket | 10 | |
| | 3.01.003.100008<br>3.205.01.030008<br>HW-299-IC | (M8) Stainless steel self-locking nut | 10 | |
| H | 3.01.003.050048<br>3.205.01.010104<br>HW-308-IC | (8*70) Stainless steel hexagon screw | 2 | |
| | 3.01.003.100008<br>3.205.01.030008<br>HW-299-IC | (M8) Stainless steel self-locking nut | 2 | |
| I | 3.01.003.050010<br>3.205.01.010090<br>HW-307-IC | (8*40) Stainless steel hexagon screw | 2 | |
| | | | | |
| | | | | |
| | | | | |
| | | | | |
| | | | | |

G60/4+2G-B

## Top roof (2)

| NO: | Code | Name | QTY | Remark |
|---|---|---|---|---|
| 1 | 2.02.001.180036<br>2.04.102.100139<br>TOP-463-IC | A617.6 top roof (painted parts) | 1 | Pearl White |
| 2 | 3.02.013.000026<br>3.201.07.000042<br>ACS-719-IC | 627 Side mirror/L(Driver) | 1 | |
| 3 | 3.02.013.000024<br>3.201.07.000043<br>ACS-720-IC | 627 Side mirror/L(Driver) | 1 | |
| 4 | 3.201.07.000004<br>3.201.07.000004<br>TOP-608-HD | A617 rearview mirror rubber pad | 1 | |
| 5 | 2.01.007.700013<br>2.03.104.100006<br>ST-140-ECO | 827.2 Seat belt lock seat | 1 | |
| 6 | 3.201.16.050019<br>ST-909-IC | Automatic locking two-point safety belt | 2 | |
| 7 | 2.03.105.000006<br>TOP-501-ECO | B617.2+2 Top roof rear support | 2 | frosted matte black |
| 8 | 2.03.105.000033<br>TOP-507-ECO | B617.4+2 canopy rack (aluminum material) | 1 | frosted matte black |
| 9 | 3.201.16.010201<br>TOP-515-ECO | B617 roof rear support connection seat (with 30 aluminum tube) | 2 | |
| 10 | 2.03.102.100013<br>TOP-ECHD700 | A617.2 top roof support plate | 1 | frosted matte black |
| 11 | 2.03.106.000005<br>TOP-801-ICG | B627 front windshield bracket-A/L (Driver) | 1 | frosted matte black |
| 12 | 2.03.106.000006<br>TOP-802-ICG | B627 front windshield bracket-A/R (Passenger) | 1 | frosted matte black |
| 13 | 3.02.011.800068<br>3.201.02.010022<br>TOP-521-ECO | 827 top roof armrest/L (Driver) | 5 | black |
| 14 | 3.02.010.000030<br>3.201.13.000036<br>TOP-ECHD703 | 30 aluminum square tube plugging cover | 2 | |
| 15 | 3.02.011.000041<br>3.201.02.010057<br>HW-374-IC | Top roof rubber column | 12 | |
| 16 | 3.02.011.000040<br>3.201.02.010056<br>HW-373-IC | Top roof rubber collar | 12 | |
| 17 | 3.204.04.000031<br>WS-905-ECO | Windshield clip (with 30 aluminum square tube) | 2 | |
| | | | | |
| | | | | |
| | | | | |
| | | | | |
| | | | | |
| | | | | |
| | | | | |
| | | | | |

# G40 G40L

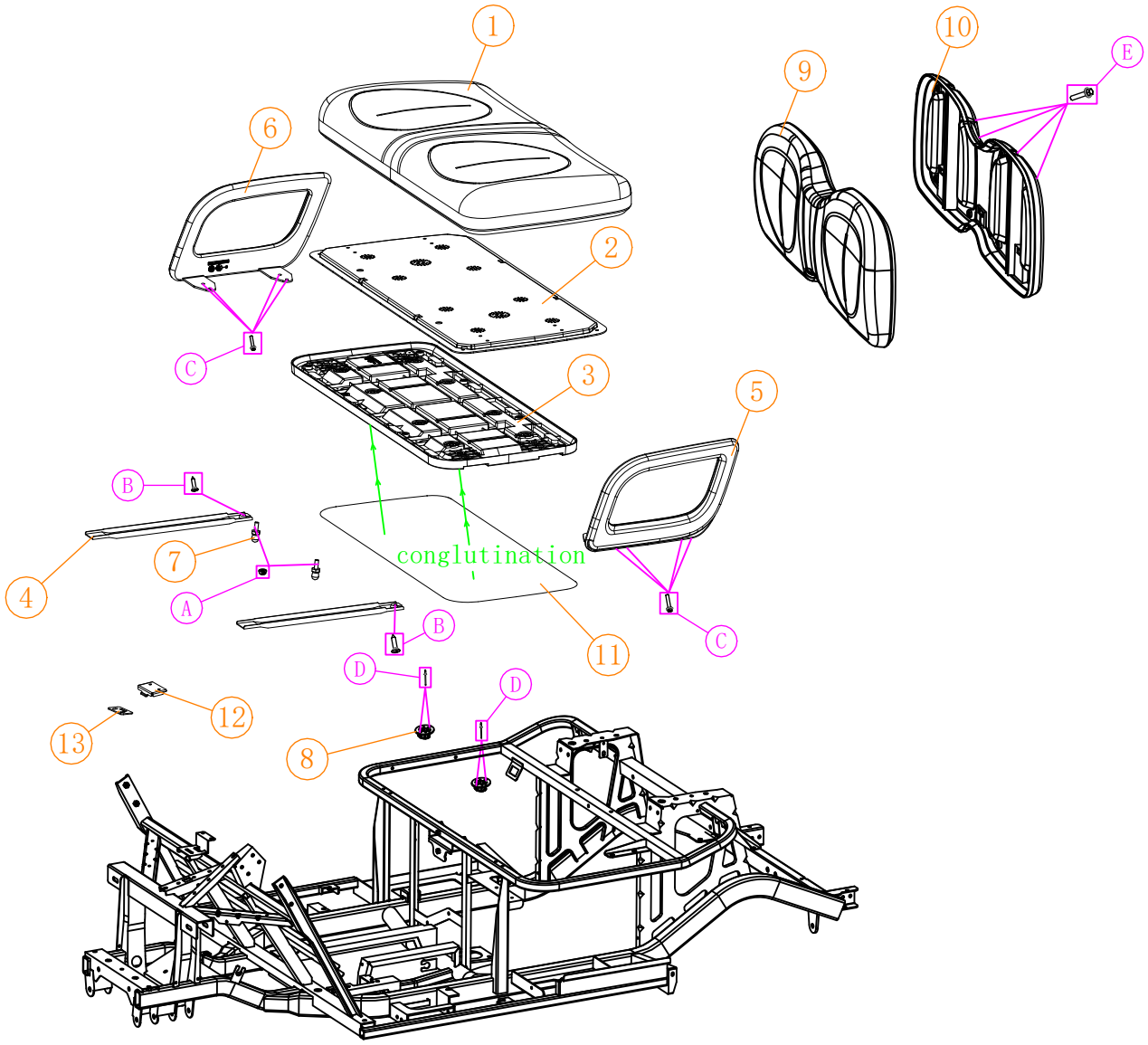


## Seat parts(1)

| NO: | Code | Name | QTY | Remark |
|---|---|---|---|---|
| 1 | 3.203.01.150012<br>ST-167-ECO | B617 Cushion-A | 1 | Black thickened version |
| 2 | 3.02.011.900074<br>3.201.16.010177<br>ST-118-ECO | B617 Seat Cushion Frame | 1 | |
| 3 | 3.02.011.900073<br>3.201.16.010176<br>ST-117-ECO | B617 seat cushion base plate | 1 | |
| 4 | 2.01.004.011367<br>2.03.105.100009<br>ST-109-ECO | B617 seat cushion reinforced folding plate | 2 | |
| 5 | 3.02.011.900086<br>3.201.16.010188<br>ST-121-ECO | B617 Cushion armrest/L(Driver) | 1 | |
| 6 | 3.02.011.900087<br>3.201.16.010189<br>ST-122-ECO | B617 Cushion armrest/R(Passenger) | 1 | |
| 7 | 3.201.16.020175<br>3.201.16.020175<br>ST-126-ECO | Seat cushion clip/male | 2 | |
| 8 | 3.201.16.020176<br>3.201.16.020176<br>ST-127-ECO | Seat cushion clip/female | 2 | |
| 9 | 3.203.02.130116<br>ST-931-IC | A627 Seat back-B | 1 | Black thickened version |
| 10 | 3.02.011.300076<br>3.201.16.010113<br>ST-752-IC | A627 Back cover-B | 1 | |
| 11 | 3.201.16.010113<br>ST-752-IC | G617-B Cushion Molding Insulation Foam | 1 | |
| 12 | 2.01.108.000004<br>ST-301-ICGPR | C727 Seat Cushion Hinge /up | 2 | |
| 13 | 2.01.103.000023<br>2.01.001.200002<br>HW-282-IC | A627 Seat Cushion Hinge /down | 2 | |
| | | | | |
| | | | | |
| | | | | |
| | | | | |
| A | 3.01.003.100014<br>3.205.04.030003<br>HW-205-IC | (M8)<br>Flange self-locking nut | 2 | |
| B | 3.01.003.110007<br>3.205.04.010081<br>HW-332-IC | (6*25) Cross recessed large flat head tapping screw | 2 | |
| C | 3.01.003.060013<br>3.205.04.010011<br>HW-377-IC | (6*30)<br>Flange screw | 8 | |
| D | 4.04.005.000074<br>3.205.06.000012<br>ST-139-ECO | (3*12) Aluminum rivets (black) | 4 | |
| E | 3.01.003.060063<br>3.205.04.010052<br>HW-334-IC | (6*75)<br>Flange screw | 4 | |
| | | | | |
| | | | | |
| | | | | |

G60 G60L

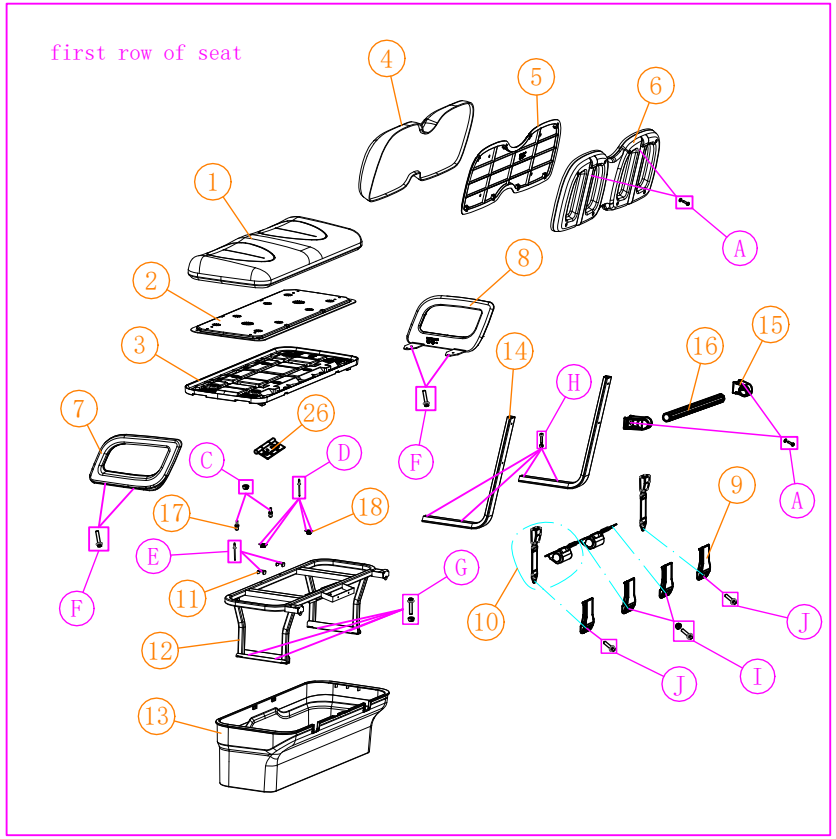
first row of seat
1
2
3
4
5
6
7
8
9
10
11
12
13
14
15
16
17
18
26
A
C
D
E
F
G
H
I
J

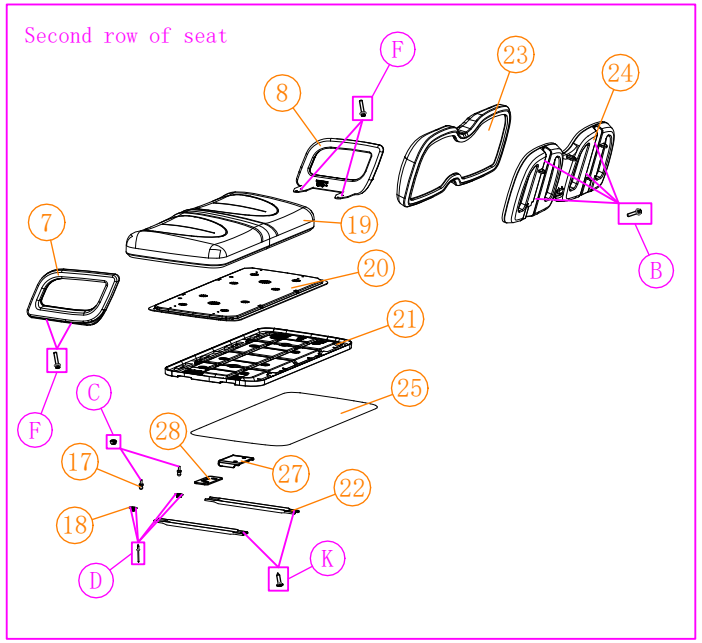
Second row of seat
7
8
17
18
19
20
21
22
23
24
25
27
28
A
B
C
D
F
K

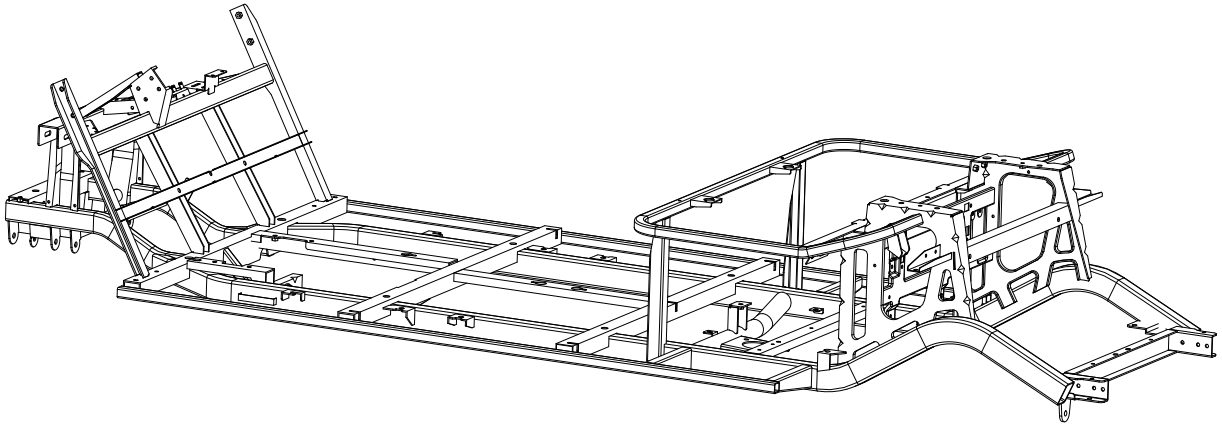

## screw specifications

| NO: | Code | Name | QTY | Remark |
|---|---|---|---|---|
| A | 3.01.003.050027<br>3.205.01.010172<br>HW-ECHD307 | (6*50) Hexagon socket chamfer screw | 4 | |
| | 3.01.003.080003<br>3.205.01.020003<br>HW-260-IC | (1.5*6*18)<br>Flat gasket | 4 | |
| B | 3.01.003.060063<br>3.205.04.010052<br>HW-334-IC | (6*75)<br>Flange screw | 4 | |
| C | 3.01.003.100014<br>3.205.04.030003<br>HW-205-IC | (M8)<br>Flange self-locking nut | 4 | |
| D | 4.04.005.000074<br>3.205.06.000012<br>ST-139-ECO | (3*12) Aluminum rivets (black) | 8 | |
| E | 4.04.005.000008<br>3.205.06.000001<br>HW-317-IC | 5*20<br>Aluminum pull nail | 2 | |
| F | 3.01.003.060013<br>3.205.04.010011<br>HW-377-IC | (6*30)<br>Flange screw | 16 | |
| G | 3.01.003.060073<br>3.205.04.010071<br>HW-413-ECO | (8*55)<br>Flange screw | 4 | |
| | 3.01.003.100014<br>3.205.04.030003<br>HW-205-IC | (M8)<br>Flange self-locking nut | 4 | |
| H | 3.01.003.060020<br>3.205.04.010017<br>HW-211-IC | (8*40)<br>Flange screw | 4 | |
| | 3.01.003.100014<br>3.205.04.030003<br>HW-205-IC | (8mm)<br>Flange self-locking nut | 4 | |
| I | 3.01.003.060007<br>3.205.04.010006<br>HW-254-IC | (12*20)<br>Flange screw | 2 | |
| | 3.01.003.100016<br>3.205.04.030005<br>HW-231-IC | (12mm) Flange self-locking nut | 2 | |
| J | 3.01.003.060007<br>3.205.04.010006<br>HW-254-IC | (10*20)<br>Flange screw | 2 | |
| K | 3.01.003.110007<br>3.205.04.010081<br>HW-332-IC | (6*25) Cross recessed large flat head tapping screw | 2 | |
| | | | | |
| | | | | |
| | | | | |
| | | | | |
| | | | | |
| | | | | |
| | | | | |
| | | | | |
| | | | | |

## B627.4+2-B/4+2G-B

| | | | | |
|---|---|---|---|---|
| 26 | 3.209.02.000257<br>ST-403-ICG | ICON logo speedometer | 2 | |
| 27 | 2.01.108.000004<br>ST-301-ICGPR | C727 Seat Cushion Hinge /up | 2 | |
| 28 | 2.01.103.000023<br>2.01.001.200002<br>HW-282-IC | A627 Seat Cushion Hinge /down | 2 | |

## Seat parts (2)

| NO: | Code | Name | QTY | |
|---|---|---|---|---|
| 1 | 3.02.005.001204<br>3.203.01.150001<br>ST-130-ECO | B617 front seat cushion | 1 | Orders must be placed at the same time |
| 2 | 3.02.011.900076<br>3.201.16.010179<br>ST-120-ECO | B617 front seat cushion frame | 1 | |
| 3 | 3.02.011.900075<br>3.201.16.010178<br>ST-119-ECO | B617 front seat cushion floor | 1 | |
| 4 | 3.02.005.001199<br>3.203.02.150001<br>ST-133-ECO | B617 seat back - A | 1 | Orders must be placed at the same time |
| 5 | 3.02.011.900085<br>3.201.16.010187<br>ST-176-ECO | B617 backrest frame (injection molded parts) | 1 | |
| 6 | 3.02.011.900083<br>3.201.16.010185<br>ST-175-ECO | B617 front seat back cover | 1 | |
| 7 | 3.02.011.900086<br>3.201.16.010188<br>ST-121-ECO | B617 Cushion armrest/L(Driver) | 2 | |
| 8 | 3.02.011.900087<br>3.201.16.010189<br>ST-122-ECO | B617 Cushion armrest/ R(Passenger) | 2 | |
| 9 | 3.02.011.300142<br>3.201.16.010085<br>ST-113-ECO | 827 backrest armrest | 4 | |
| 10 | 3.201.16.050018<br>ST-128-ECO | Automatic locking two-point safety belt | 2 | |
| 11 | 2.01.004.011368<br>2.03.105.100010<br>ST-110-ECO | B617 Front seat barrel buckle | 2 | |
| 12 | 2.01.004.210152<br>2.03.105.100005<br>ST-108-ECO | B617 seat box support | 1 | |
| 13 | 3.02.011.900072<br>3.201.02.010061<br>ST-112-ECO | B617 seat box | 1 | |
| 14 | 2.01.004.011369<br>2.03.105.000002<br>ST-102-ECO | B617 front backrest elbow | 2 | |
| 15 | 3.02.007.000072<br>3.201.16.010137<br>ST-116-ECO | 827 seat back armrest fix | 2 | |
| 16 | 2.01.004.010658<br>2.03.104.100048<br>ST-100-ECO | 827 seat back armrest | 1 | |
| 17 | 3.02.014.000159<br>3.201.16.020175<br>ST-126-ECO | Seat cushion clip/male | 4 | |
| 18 | 3.02.014.000160<br>3.201.16.020176<br>ST-127-ECO | Seat cushion clip/female | 4 | |
| 19 | 3.02.005.001205<br>3.203.01.150002<br>ST-131-ECO | B617 Cushion-A | 1 | |
| 20 | 3.02.011.900074<br>3.201.16.010177<br>ST-118-ECO | B617 Seat Cushion Frame | 1 | |
| 21 | 3.02.011.900073<br>3.201.16.010176<br>ST-117-ECO | B617 seat cushion base plate | 1 | |
| 22 | 2.01.004.011367<br>2.03.105.100009<br>ST-109-ECO | B617 Cushion stiffener | 2 | |
| 23 | 3.02.005.000743<br>3.203.02.130005<br>ST-770-IC | A627 Seat back-B | 1 | 黑色 |
| 24 | 3.02.011.300076<br>3.201.16.010113<br>ST-752-IC | A627 Back cover-B | 1 | |
| 25 | 3.201.10.000088<br>ST-402-ICG | G617-B Back cover-B | 1 | |

Rear seat parts

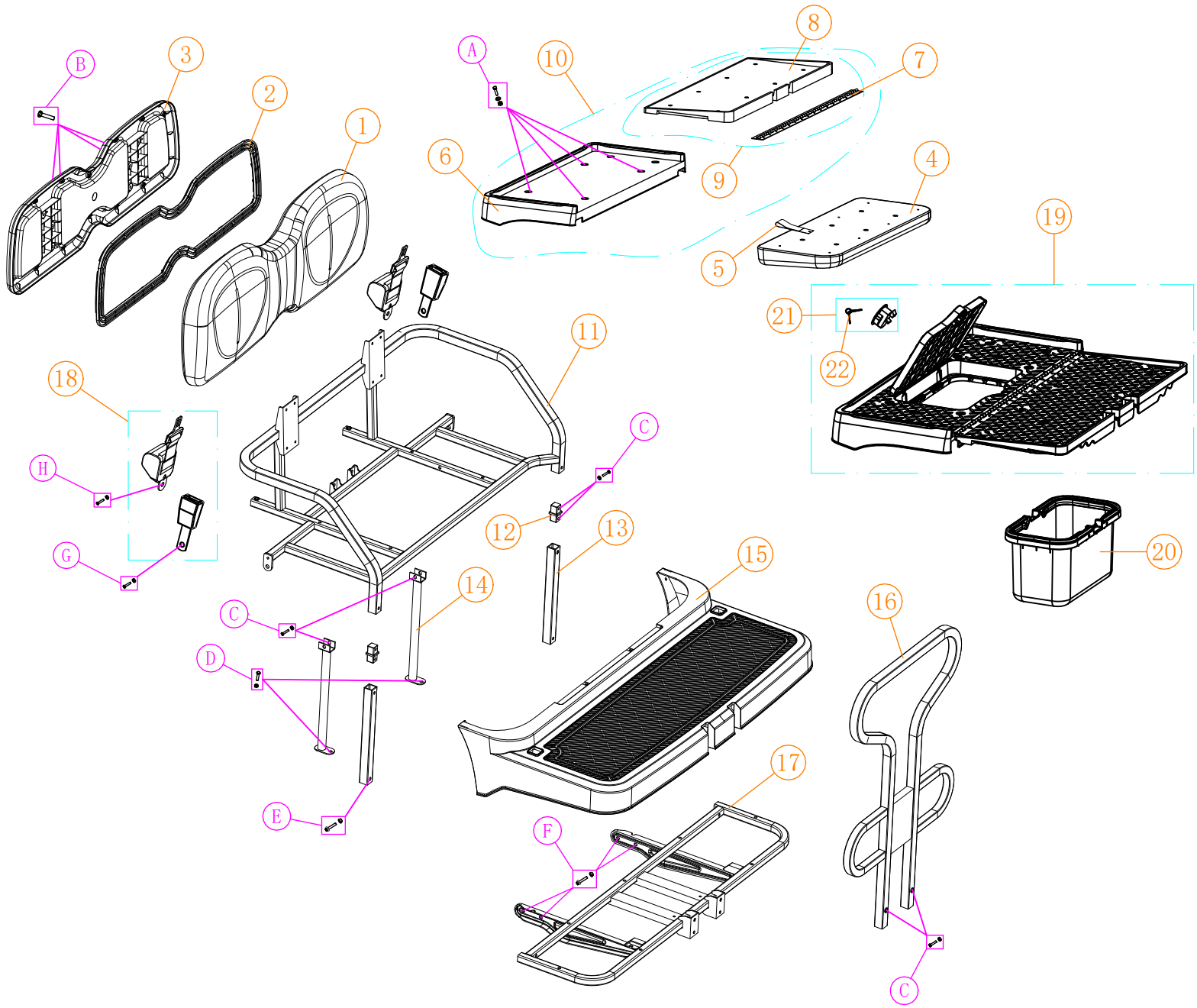

## screw specifications

| NO: | Code | Name | QTY | Remark |
|---|---|---|---|---|
| A | 3.205.01.010089<br>3.205.01.010089<br>HW-285-IC | （6*40） Hexagonal stainless steel screw | 4 | |
| | 3.205.01.020003<br>3.205.01.020003<br>HW-260-IC | （1.5*6*18） Flat gasket | 4 | |
| | 3.205.01.030007<br>3.205.01.030007<br>HW-310-IC | (M6) Stainless steel nut | 4 | |
| B | 3.205.01.010089<br>3.205.01.010089<br>HW-285-IC | （6*40）<br>Hexagonal stainless steel screw | 4 | |
| C | 3.205.01.010090<br>3.205.01.010090<br>HW-307-IC | （8*40）<br>Hexagonal stainless steel screw | 8 | |
| | 3.205.01.030008<br>3.205.01.030008<br>HW-299-IC | (M8) Stainless steel nut | 8 | |
| D | 3.205.01.010086<br>3.205.01.010086<br>HW-262-IC | （8*25） Hexagonal stainless steel screw | 2 | |
| | 3.205.01.030008<br>3.205.01.030008<br>HW-299-IC | (M8) Stainless steel nut | 2 | |
| E | 3.205.04.010032<br>3.205.04.010032<br>HW-300-IC | (8*70)<br>Flange screw | 2 | |
| | 3.205.04.030003<br>3.205.04.030003<br>HW-205-IC | (M8)<br>Flange nut | 2 | |
| F | 3.205.04.010005<br>3.205.04.010005<br>HW-208-IC | (8*20)<br>Flange screw | 4 | |
| | 3.205.04.030003<br>3.205.04.030003<br>HW-205-IC | (M8)<br>Flange self-locking nut | 4 | |
| G | 3.205.01.010101<br>3.205.01.010101<br>ST-135-ECO | （10*25） Hexagonal stainless steel screw | 4 | |
| | 3.205.04.030004<br>3.205.04.030004<br>HW-239-IC | (M10) Flange self-locking nut | 4 | |
| H | 3.205.01.010183<br>3.205.01.010183<br>HW-ECHD308 | (10*20)<br>Stainless steel hexagon screw | 2 | |
| | 3.205.01.030019<br>3.205.01.030019<br>HW-ECHD309 | (10mm) Stainless steel self-locking nut | 2 | |
| | | | | |
| | | | | |
| | | | | |
| | | | | |
| | | | | |
| | | | | |
| | | | | |
| | | | | |

## Rear seat parts

| NO: | Code | Name | QTY | Remark |
|---|---|---|---|---|
| 1 | 3.203.02.150007<br>ST-173-ECO | B617 rear seat back-A | 1 | Orders need to be placed at the same time |
| 2 | 3.02.011.900085<br>3.201.16.010187<br>ST-176-ECO | 827 rear seat back frame | 1 | |
| 3 | 3.02.011.900083<br>3.201.16.010185<br>ST-175-ECO | B617 backrest frame | 1 | |
| 4 | 3.02.005.000551<br>3.203.01.130060<br>ST-1117-IC | A627 folding seat cushion (injection base plate)-B | 1 | Folding additional seats |
| 5 | 3.02.014.000397<br>3.201.16.010011<br>ST-763-IC | A627 foldable rear seat cushion drawstring | 1 | |
| 6 | 3.02.011.300123<br>3.201.16.010127<br>ST-713-IC | A627 foldable rear seat bottom plate | 1 | Folding additional seats |
| 7 | 3.01.006.900124<br>3.201.16.010154<br>HW-342-IC | Plastic hinge | 1 | |
| 8 | 3.02.011.300089<br>3.201.16.010125<br>ST-712-IC | A627 foldable rear seat turnorer board | 1 | Folding additional seats |
| 9 | 3.02.011.300263<br>3.201.16.010124<br>ST-719-IC | A627 foldable rear seat turnorer board assy | 1 | |
| 10 | 3.02.011.300097<br>3.201.16.010126<br>ST-720-IC | A627 foldable rear seat bottom plate assy | 1 | |
| 11 | 2.03.105.000077<br>ST-404-ICG | B617 rear seat bottom frame | 1 | |
| 12 | 3.02.014.000341<br>3.201.16.020173<br>ST-125-ECO | 30 Aluminum square tube connection seat | 2 | |
| 13 | 2.01.004.011361<br>2.03.105.000001<br>ST-101-ECO | B617 Rear support pipe after adding seat | 2 | |
| 14 | 2.01.004.210150<br>2.03.105.100014<br>ST-111-ECO | B617 Support frame in additional seat | 2 | |
| 15 | 3.02.011.900106<br>3.201.16.010196<br>ST-123-ECO | B617 Caddie padel | 1 | |
| 16 | 2.01.007.800245<br>2.03.105.000009<br>ST-104-ECO | B617 real seat armrest | 1 | |
| 17 | 2.01.004.210151<br>2.03.105.100004<br>ST-107-ECO | B617 Caddie padel bottom frame | 1 | |
| 18 | 3.201.16.050019<br>ST-909-IC | Automatic locking two-point safety belt | 2 | |
| 19 | 3.201.16.010226<br>ST-779-IC | A617 foldable rear seat bottom plate assy | 1 | |
| 20 | 3.201.16.010227<br>ST-772-IC | A617 storage bucket with extra seat + handle | 1 | |
| 21 | 3.208.02.000038<br>ST-773-IC | Storage bucket cover lock | 1 | |
| 22 | 3.208.02.000040<br>KS-704-IC | Storage bucket lid lock key | 1 | |
| | | | | |
| | | | | |
| | | | | |

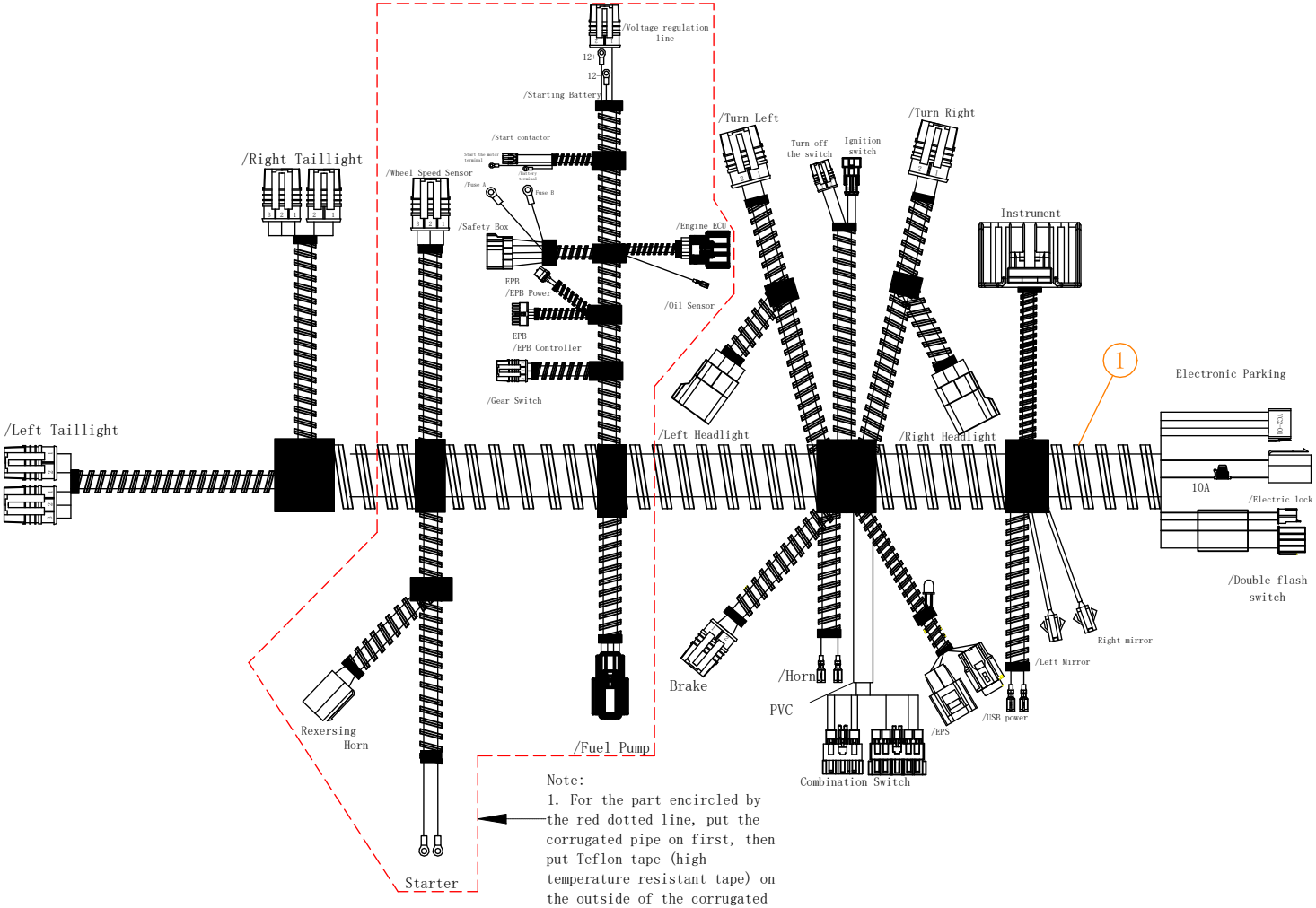


Note:
1. For the part encircled by the red dotted line, put the corrugated pipe on first, then put Teflon tape (high temperature resistant tape) on the outside of the corrugated pipe.

## Wiring harness

| NO: | Code | Name | QTY | Remark |
|---|---|---|---|---|
| 1 | 3.03.004.900280<br>ELE-901-ICG | G617.2 (LT-GAS) wiring harness | 1 | |

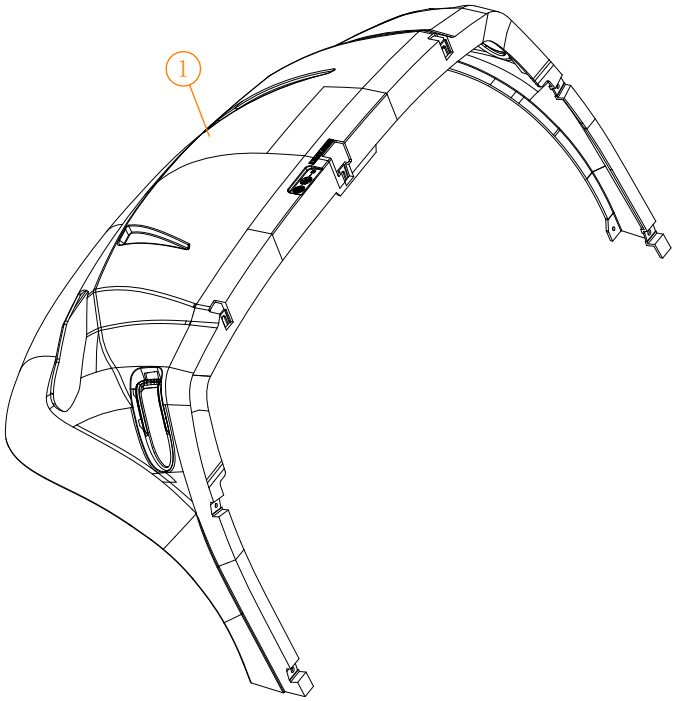


## B627.Front Cover Paint color detailed

| NO: | Code | Name | Remark |
|---|---|---|---|
| 1 | 2.02.001.220017<br>2.04.106.200001<br>BD-849-ECO | B627 front cover (painted parts) | (Raven Black) |
| | 2.02.001.220018<br>2.04.106.200002<br>BD-850-ECO | | (Alpine White) |
| | 2.02.001.220019<br>2.04.106.200003<br>BD-851-ECO | | (Indigo Blue) |
| | 2.04.106.200004<br>ST-159-ECO | | (Sangria Red) |
| | 2.04.106.200005<br>BD-852-ECO | | (Forest Green) |
| | 2.04.106.200006<br>BD-853-ECO | | (Champagne) |
| | 2.04.106.200009<br>BD-854-ECO | | (Caribbean Blue) |
| | 2.04.106.200010<br>BD-855-ECO | | (Tangerine Orange) |
| | 2.04.106.200011<br>BD-856-ECO | | (Tuscan Yellow) |
| | 2.04.106.200012<br>BD-857-ECO | | (Purple) |
| | 2.04.106.200013<br>BD-858-ECO | | (Torch Red) |
| | 2.04.106.200014<br>BD-859-ECO | | (Silver) |
| | 2.04.106.200015<br>BD-860-ECO | | (Lime Green) |
| | 3.02.011.900069<br>3.201.02.010071<br>BD-861-ECO | B627 front cover (injection molded part) | (beige) |
| | | | |
| | | | |
| | | | |
| | | | |
| | | | |
| | | | |
| | | | |
| | | | |
| | | | |
| | | | |
| | | | |

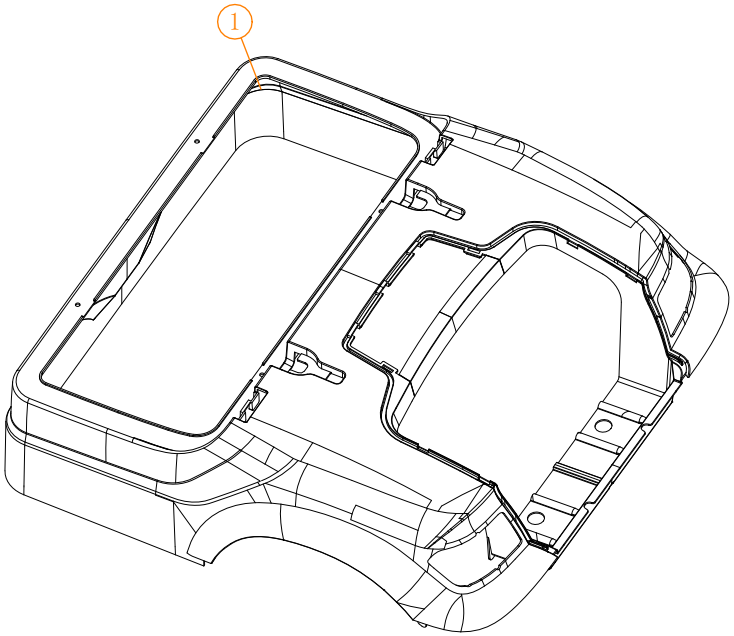


## B627.Rear Body cover Paint color detailed

| NO: | Code | Name | Remark |
|---|---|---|---|
| 1 | 2.02.001.210001<br>2.04.105.300001<br>BD-563-ECO | B617 rear cover (painted parts) | (Alpine White) |
| | 2.02.001.210002<br>2.04.105.300002<br>BD-564-ECO | | (Champagne) |
| | 2.02.001.210003<br>2.04.105.300003<br>BD-565-ECO | | (Raven Black) |
| | 2.02.001.210004<br>2.04.105.300004<br>BD-566-ECO | | (Torch Red) |
| | 2.02.001.210005<br>2.04.105.300005<br>BD-567-ECO | | (Indigo Blue) |
| | 2.02.001.210006<br>2.04.105.300006<br>BD-568-ECO | | (Sky blue) |
| | 2.02.001.210007<br>2.04.105.300007<br>BD-569-ECO | | (Yellow) |
| | 2.02.001.210008<br>2.04.105.300008<br>BD-570-ECO | | Tangerine Orange |
| | 2.02.001.210009<br>2.04.105.300009<br>BD-571-ECO | | (Silver) |
| | 2.02.001.210010<br>2.04.105.300010<br>BD-572-ECO | | (Lime Green) |
| | 2.02.001.210011<br>2.04.105.300011<br>BD-573-ECO | | (PANTONE 267) |
| | 2.02.001.210012<br>2.04.105.300012<br>BD-574-ECO | | (Forest Green) |
| | 2.02.001.210013<br>2.04.105.300013<br>BD-575-ECO | | (Sangria Red) |
| | 2.02.001.210014<br>2.04.105.300014<br>BD-576-ECO | | basalt lime |
| | 2.02.001.210015<br>2.04.105.300015<br>BD-577-ECO | | green |
| | 2.02.001.210016<br>2.04.105.300016<br>BD-578-ECO | | aqua blue |
| | 3.02.011.900071<br>3.201.02.010060<br>BD-507-ECO | B617 rear cover (injection molded part) | (Creamy white) |
| | | | |
| | | | |
| | | | |
| | | | |
| | | | |
| | | | |
| | | | |
| | | | |

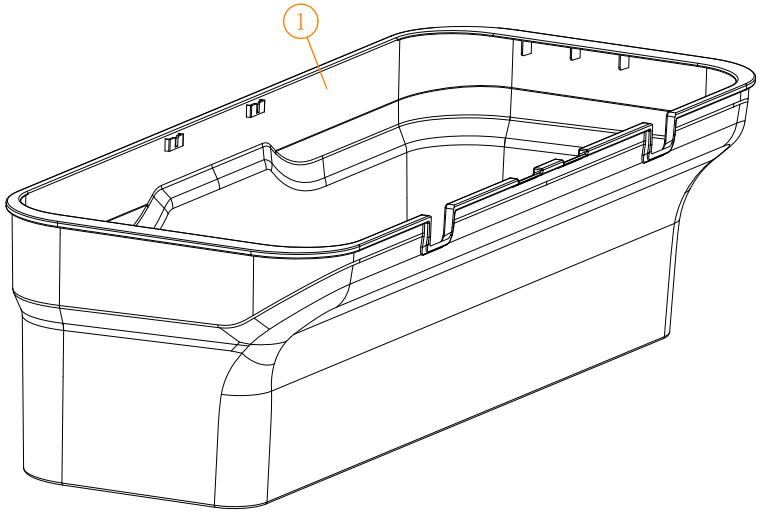


## B627 Middle seat drum Paint color detailed

| NO: | Code | Name | Remark |
|---|---|---|---|
| 1 | 2.02.001.370001<br>2.04.105.400001<br>ST-143-ECO | B617 middle seat bucket (painted parts) | (Alpine White) |
| | 2.04.105.400002<br>2.04.105.400002<br>TOP-ECHD700 | | (Champagne) |
| | 2.02.001.370003<br>2.04.105.400003<br>ST-145-ECO | | (Raven Black) |
| | 2.02.001.370004<br>2.04.105.400004<br>ST-146-ECO | | (Torch Red) |
| | 2.02.001.370005<br>2.04.105.400005<br>ST-147-ECO | | (Indigo Blue) |
| | 2.02.001.370006<br>2.04.105.400006<br>ST-148-ECO | | (Sky blue) |
| | 2.02.001.370007<br>2.04.105.400007<br>ST-149-ECO | | (Yellow) |
| | 2.02.001.370008<br>2.04.105.400008<br>ST-150-ECO | | (Tangerine Orange) |
| | 2.02.001.370009<br>2.04.105.400009<br>ST-151-ECO | | (Silver) |
| | 2.02.001.370010<br>2.04.105.400010<br>ST-152-ECO | | (Lime Green) |
| | 2.02.001.370011<br>2.04.105.400011<br>ST-153-ECO | | (PANTONE 267C) |
| | 2.02.001.370012<br>2.04.105.400012<br>ST-154-ECO | | (Forest Green) |
| | 2.02.001.370013<br>2.04.105.400013<br>ST-155-ECO | | (Sangria Red) |
| | 2.02.001.370014<br>2.04.105.400014<br>ST-156-ECO | | basalt lime |
| | 2.02.001.370015<br>2.04.105.400015<br>ST-157-ECO | | green |
| | 2.02.001.370016<br>2.04.105.400016<br>ST-158-ECO | | aqua blue |
| | 3.02.011.900072<br>3.201.02.010061<br>ST-112-ECO | B617 middle seat bucket (injection molded part) | (Creamy white) |
| | | | |
| | | | |
| | | | |
| | | | |
| | | | |
| | | | |
| | | | |
| | | | |

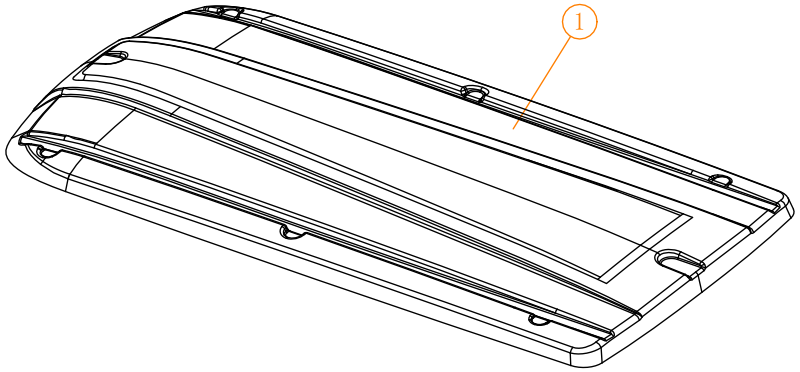


## A617.4 Top roof Paint color detailed

| NO: | Code | Name | Remark |
|---|---|---|---|
| 1 | 2.02.001.180030<br>2.04.102.100076<br>TOP-438-IC | A617.4 roof (painted parts) | (Indigo Blue) |
| | 2.02.001.180022<br>2.04.102.100067<br>TOP-439-IC | | (Sky blue) |
| | 2.02.001.180032<br>2.04.102.100078<br>TOP-440-IC | | (Sangria Red) |
| | 2.02.001.180033<br>2.04.102.100079<br>TOP-441-IC | | (Torch Red) |
| | 2.02.001.180028<br>2.04.102.100074<br>TOP-442-IC | | (Forest Green) |
| | 2.02.001.180027<br>2.04.102.100073<br>TOP-443-IC | | (Lime Green) |
| | 2.02.001.180029<br>2.04.102.100075<br>TOP-444-IC | | (Champagne) |
| | 2.02.001.180090<br>2.04.102.100066<br>TOP-445-IC | | (Silver) |
| | 2.02.001.180031<br>2.04.102.100077<br>TOP-446-IC | | (Yellow) |
| | 2.02.001.180068<br>2.04.102.100071<br>TOP-447-IC | | (Tangerine Orange) |
| | 2.02.001.180081<br>2.04.102.100064<br>TOP-448-IC | | (Purple) |
| | 2.02.001.180038<br>2.04.102.100070<br>TOP-449-IC | | (Alpine White) |
| | 2.02.001.180034<br>2.04.102.100069<br>TOP-450-IC | | (Raven Black) |
| | 3.02.011.900061<br>3.201.02.010003<br>TOP-451-IC | A617.4 roof (injection molded parts) | (Beige) |
| | | | |
| | | | |
| | | | |
| | | | |
| | | | |
| | | | |
| | | | |
| | | | |
| | | | |
| | | | |
| | | | |

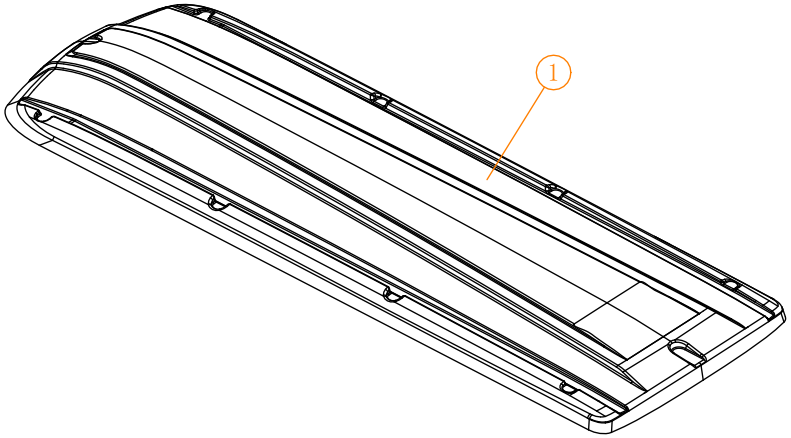


## A617.6 Top roof Paint color detailed

| NO: | Code | Name | Remark |
|---|---|---|---|
| 1 | 2.02.001.180046<br>2.04.102.100145<br>TOP-452-IC | A617.6 roof (painted parts) | (Indigo Blue) |
| | 2.02.001.180023<br>2.04.102.100126<br>TOP-453-IC | | (Sky blue) |
| | 2.02.001.180048<br>2.04.102.100127<br>TOP-454-IC | | (Sangria Red) |
| | 2.02.001.180044<br>2.04.102.100144<br>TOP-455-IC | | (Torch Red) |
| | 2.02.001.180062<br>2.04.102.100132<br>TOP-456-IC | | (Forest Green) |
| | 2.02.001.180050<br>2.04.102.100129<br>TOP-457-IC | | (Lime Green) |
| | 2.02.001.180051<br>2.04.102.100130<br>TOP-458-IC | | (Champagne) |
| | 2.02.001.180106<br>2.04.102.100122<br>TOP-459-IC | | (Silver) |
| | 2.02.001.180052<br>2.04.102.100131<br>TOP-460-IC | | (Yellow) |
| | 2.02.001.180069<br>2.04.102.100138<br>TOP-461-IC | | (Tangerine Orange) |
| | 2.02.001.180089<br>2.04.102.100136<br>TOP-462-IC | | (Purple) |
| | 2.02.001.180036<br>2.04.102.100139<br>TOP-463-IC | | (Alpine White) |
| | 2.02.001.180049<br>2.04.102.100128<br>TOP-464-IC | | (Raven Black) |
| | 3.02.011.900062<br>3.201.02.010004<br>TOP-415-IC | A617.6 roof (injection molded parts) | (Beige) |
| | | | |
| | | | |
| | | | |
| | | | |
| | | | |
| | | | |
| | | | |
| | | | |
| | | | |
| | | | |
| | | | |

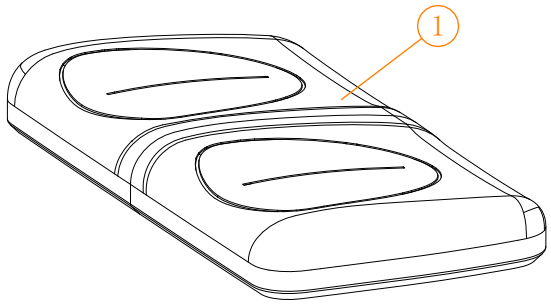


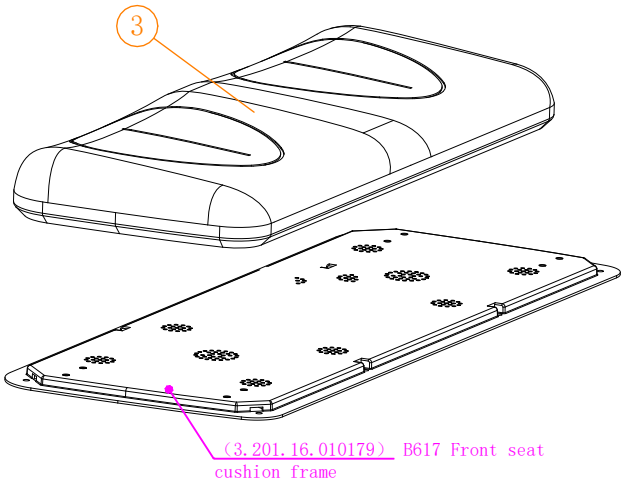


Note: When purchasing the B617 front seat cushion, you must also purchase the B617 front seat cushion frame.

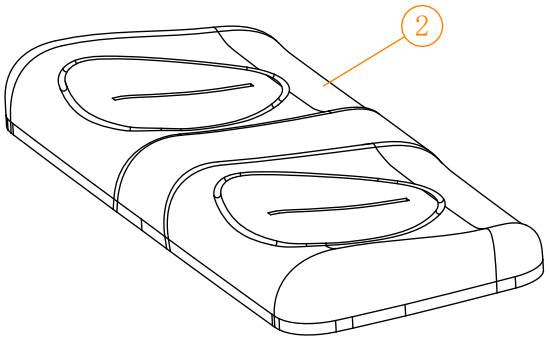


**Thickening Type**
Sponge hardness "Shore A" is 55
All rubber four sided elastic/rolled leather pattern

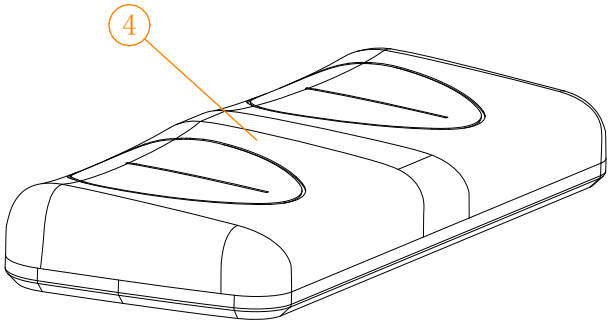


**Thickening Type**
Sponge hardness "Shore A" is 55
All rubber four sided elastic/rolled leather pattern

## B627 seat cushion color details

| NO: | Code | Name | Remark |
|---|---|---|---|
| 1 | 3.02.005.001205<br>3.203.01.150002<br>ST-131-ECO | B617 Cushion-A | (Black) |
| | 3.02.005.001228<br>3.203.01.150004<br>ST-161-ECO | | (Brown+Brown) |
| | 3.203.01.150006<br>ST-163-ECO | | (Brown) |
| | 3.203.01.150008<br>ST-164-ECO | | (Black+Black) |
| | | | |
| 2 | 3.203.01.150010<br>ST-165-ECO | B617 Cushion-A (Thicken) | (Brown) |
| | 3.203.01.150012<br>ST-167-ECO | | (Black) |
| | 3.203.01.150015<br>ST-406-ICG | | (Black+Black) |
| | 3.203.01.150017<br>ST-407-ICG | | (Brown+Brown) |
| | | | |
| 3 | 3.02.005.001204<br>3.203.01.150001<br>ST-130-ECO | B617 Cushion-A | (Black) |
| | 3.02.005.001227<br>3.203.01.150003<br>ST-160-ECO | | (Brown+Brown) |
| | 3.203.01.150005<br>ST-162-ECO | | (Brown) |
| | 3.203.01.150014<br>ST-408-ICG | | (Black+Black) |
| | | | |
| 4 | 3.203.01.150011<br>ST-166-ECO | B617 Cushion-A(Thicken) | (Brown) |
| | 3.203.01.150013<br>ST-168-ECO | | (Black) |
| | 3.203.01.150016<br>ST-409-ICG | | (Black+Black) |
| | 3.203.01.150018<br>ST-410-ICG | | (Brown+Brown) |
| | | | |
| | | | |
| | | | |
| | | | |
| | | | |
| | | | |

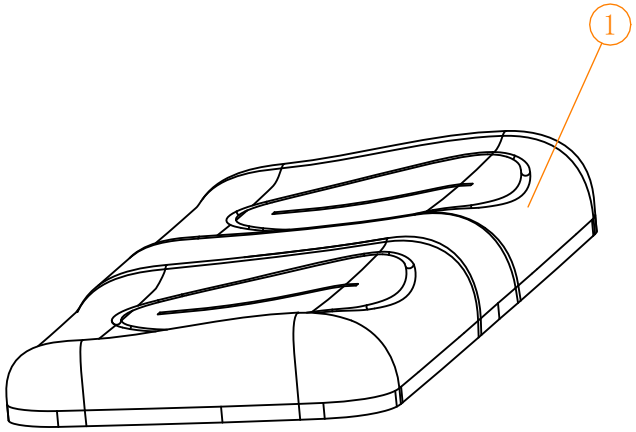


All rubber four sided elastic/rolled leather pattern

| | | | |
|---|---|---|---|
| 1 | 3.02.005.000551<br>3.203.01.130060<br>ST-1117-IC | A617 folding seat cushion (injection base plate)-B | (Black) |
| | 3.02.005.000547<br>3.203.01.130061<br>ST-711-IC | | (Brown) |
| | 3.02.005.001106<br>3.203.01.130097<br>STC-303-IC | | (Grey) (Alpine White) |

## A627 foldable rear seat cushion-B Paint color detailed

| NO: | Code | Name | Remark |
|---|---|---|---|
| 1 | 3.02.005.000583<br>3.203.01.130082<br>STC-279-IC | A627 folding seat cushion (injection base plate)-B | (Black) (Black) |
| | 3.02.005.001120<br>3.203.01.130084<br>STC-278-IC | | (Brown) (Brown) |
| | 3.02.005.000555<br>3.203.01.130085<br>STC-280-IC | | (Torch Red) (Alpine White) |
| | 3.02.005.000556<br>3.203.01.130098<br>STC-281-IC | | (Sky blue) (Alpine White) |
| | 3.02.005.000571<br>3.203.01.130102<br>STC-282-IC | | (Torch Red) (Raven Black) |
| | 3.02.005.000558<br>3.203.01.130090<br>STC-283-IC | | (Raven Black) (Alpine White) |
| | 3.02.005.000559<br>3.203.01.130077<br>STC-284-IC | | (Champagne) (Alpine White) |
| | 3.02.005.000560<br>3.203.01.130083<br>STC-285-IC | | (Yellow) (Alpine White) |
| | 3.02.005.000573<br>3.203.01.130101<br>STC-286-IC | | (Alpine White) (Alpine White) |
| | 3.02.005.000574<br>3.203.01.130088<br>STC-287-IC | | (Sangria Red) (Raven Black) |
| | 3.02.005.000575<br>3.203.01.130074<br>STC-288-IC | | (Forest Green) (Raven Black) |
| | 3.02.005.000576<br>3.203.01.130099<br>STC-289-IC | | (Indigo Blue) (Raven Black) |
| | 3.02.005.000577<br>3.203.01.130094<br>STC-290-IC | | (Lime Green) (Raven Black) |
| | 3.02.005.000578<br>3.203.01.130100<br>STC-291-IC | | (Yellow) (Raven Black) |
| | 3.02.005.000579<br>3.203.01.130091<br>STC-292-IC | | (Champagne) (Raven Black) |
| | 3.02.005.000581<br>3.203.01.130075<br>STC-293-IC | | (Forest Green) (Alpine White) |
| | 3.02.005.000582<br>3.203.01.130079<br>STC-294-IC | | (Sky blue) (Raven Black) |
| | 3.02.005.001010<br>3.203.01.130093<br>STC-295-IC | | (Purple) (Alpine White) |
| | 3.02.005.001015<br>3.203.01.130092<br>STC-296-IC | | (Purple) (Raven Black) |
| | 3.02.005.001016<br>3.203.01.130086<br>STC-297-IC | | (Tangerine Orange) (Raven Black) |
| | 3.02.005.001017<br>3.203.01.130089<br>STC-298-IC | | (Tangerine Orange) (Alpine White) |
| | 3.02.005.000568<br>3.203.01.130076<br>STC-299-IC | | (Sangria Red) (Alpine White) |
| | 3.02.005.000569<br>3.203.01.130087<br>STC-300-IC | | (Indigo Blue) (Alpine White) |
| | 3.02.005.000570<br>3.203.01.130095<br>STC-301-IC | | (Lime Green) (Alpine White) |
| | 3.02.005.001107<br>3.203.01.130096<br>STC-302-IC | | (Grey) (Raven Black) |

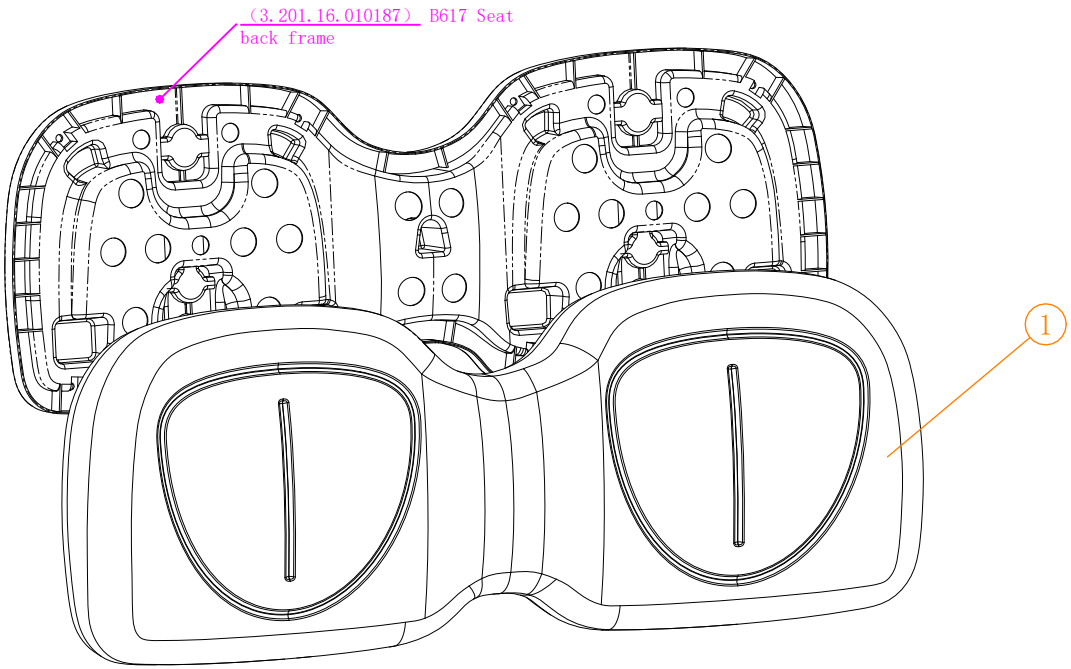


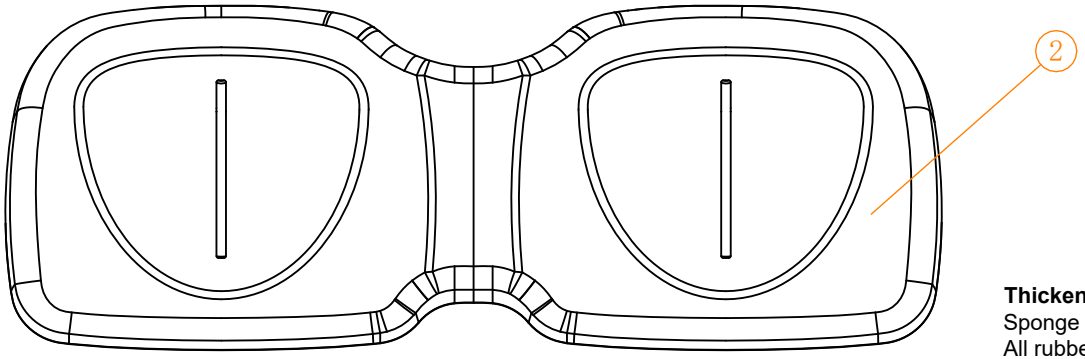


**Thickening Type**
Sponge hardness "Shore A" is 55
All rubber four sided elastic/rolled leather pattern

## B627.Rear Body cover Paint color detailed

| NO: | Code | Name | Remark |
|---|---|---|---|
| 1 | 3.02.005.001199<br>3.203.02.150001<br>ST-133-ECO | B617 Front backrest-A | (Black) |
| | 3.02.005.001225<br>3.203.02.150003<br>ST-169-ECO | | (Brown+Brown) |
| | 3.203.02.150005<br>ST-171-ECO | | (Brown) |
| | 3.203.02.150009<br>ST-411-ICG | | (Black+Black) |
| 2 | 3.203.02.150007<br>ST-173-ECO | B617 Front backrest-A(Thicken) | (Black) |
| | 3.203.02.150008<br>ST-412-ICG | | (Brown) |
| | 3.203.02.150011<br>ST-413-ICG | | (Black+Black) |
| | 3.203.02.150013<br>ST-414-ICG | | (Brown+Brown) |

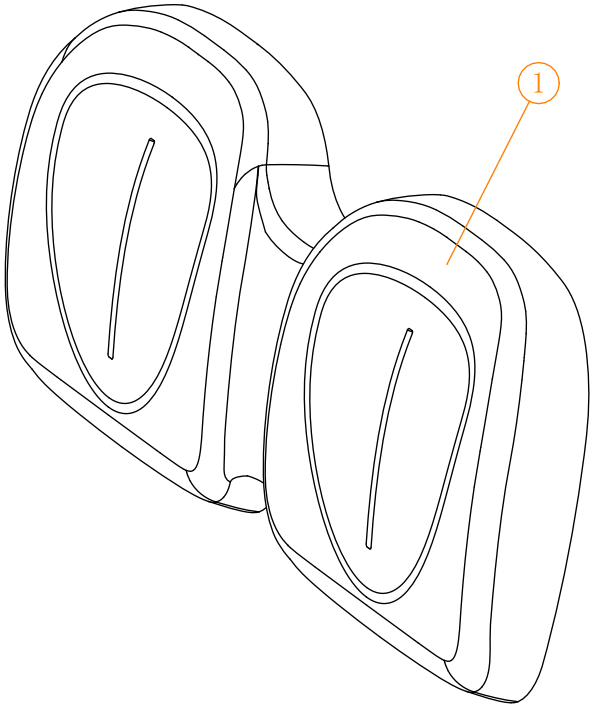


All rubber four sided elastic/rolled leather pattern

| | | | |
|---|---|---|---|
| 1 | 3.02.005.000743<br>3.203.02.130005<br>ST-770-IC | A617 seat back-B | (Black) |
| | 3.02.005.000744<br>3.203.02.130001<br>ST-751-IC | | (Brown) |
| | 3.02.005.001117<br>3.203.02.130007<br>STC-328-IC | | (Brown) (Brown) |

## A627 seat back-B Paint color detailed

| NO: | Code | Name | Remark |
|---|---|---|---|
| 1 | 3.02.005.000747<br>3.203.02.130012<br>STC-304-IC | A627 seat back-B | (Indigo Blue) (Alpine White) |
| | 3.02.005.000771<br>3.203.02.130011<br>STC-305-IC | | (Indigo Blue) (Raven Black) |
| | 3.02.005.000753<br>3.203.02.130021<br>STC-306-IC | | (Sky blue) (Alpine White) |
| | 3.02.005.000777<br>3.203.02.130020<br>STC-307-IC | | (Sky blue) (Raven Black) |
| | 3.02.005.000766<br>3.203.02.130013<br>STC-308-IC | | (Forest Green) (Alpine White) |
| | 3.02.005.000769<br>3.203.02.130029<br>STC-309-IC | | (Sangria Red) (Raven Black) |
| | 3.02.005.000752<br>3.203.02.130027<br>STC-310-IC | | (Torch Red) (Shiny white) |
| | 3.02.005.000774<br>3.203.02.130033<br>STC-311-IC | | (Torch Red) (Raven Black) |
| | 3.02.005.000765<br>3.203.02.130028<br>STC-312-IC | | (Forest Green) (Alpine White) |
| | 3.02.005.000770<br>3.203.02.130010<br>STC-313-IC | | (Forest Green) (Raven Black) |
| | 3.02.005.000767<br>3.203.02.130023<br>STC-314-IC | | (Sangria Red) (Alpine White) |
| | 3.02.005.000772<br>3.203.02.130022<br>STC-315-IC | | (Lime Green) (Raven Black) |
| | 3.02.005.000755<br>3.203.02.130018<br>STC-316-IC | | (Champagne) (Alpine White) |
| | 3.02.005.000775<br>3.203.02.130017<br>STC-317-IC | | (Champagne) (Raven Black) |
| | 3.02.005.001073<br>3.203.02.130032<br>STC-318-IC | | (Grey) (Alpine White) |
| | 3.02.005.001033<br>3.203.02.130093<br>STC-319-IC | | (Grey) (Raven Black) |
| | 3.02.005.000757<br>3.203.02.130026<br>STC-320-IC | | (Yellow) (Alpine White) |
| | 3.02.005.000773<br>3.203.02.130025<br>STC-321-IC | | (Yellow) (Raven Black) |
| | 3.02.005.000782<br>3.203.02.130006<br>STC-322-IC | | Tangerine Orange/Pantong165C Pearl White(Tangerine Orange) |
| | 3.02.005.000970<br>3.203.02.130034<br>STC-323-IC | | Tangerine Orange/Pantong165C+Pearl (Alpine White) |
| | 3.02.005.001006<br>3.203.02.130009<br>STC-324-IC | | Black(Tangerine Orange) (Raven Black) |
| | 3.02.005.000780<br>3.203.02.130008<br>STC-325-IC | | (Purple) (Alpine White) |
| | 3.02.005.000778<br>3.203.02.130031<br>STC-326-IC | | (Purple) (Raven Black) |
| | 3.02.005.000754<br>3.203.02.130015<br>STC-327-IC | | (Alpine White) (Alpine White) |
| | 3.02.005.000781<br>3.203.02.130004<br>STC-329-IC | | (Raven Black) (Alpine White) |
| | | | (Black) (Black) |